HITACHI
Inspire the Next

PM | NO. 0418E

RAK-65NH5A/RAC-65NH5

SERVICE MANUAL
TECHNICAL INFORMATION

REFER TO THE FOUNDATION MANUAL

FOR SERVICE PERSONNEL ONLY

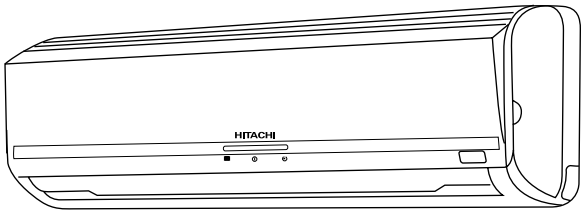

RAK-65NH5A

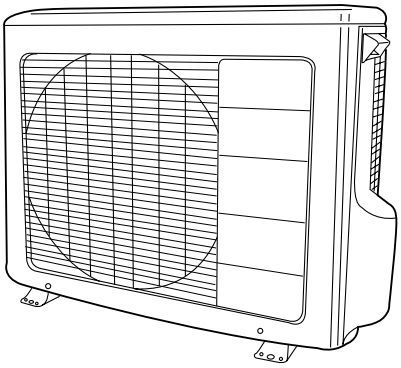

RAC-65NH5

CONTENTS

SPECIFICATIONS ---- 5
HOW TO USE ---- 7
CONSTRUCTION AND DIMENSIONAL DIAGRAM ---- 29
MAIN PARTS COMPONENT ---- 31
WIRING DIAGRAM ---- 33
CIRCUIT DIAGRAM ---- 35
PRINTED WIRING BOARD LOCATION DIAGRAM ---- 39
BLOCK DIAGRAM ---- 43
BASIC MODE ---- 45
REFRIGERATING CYCLE DIAGRAM ---- 59
AUTO SWING FUNCTION ---- 60
DESCRIPTION OF MAIN CIRCUIT OPERATION ---- 61
SERVICE CALL Q & A ---- 92
TROUBLE SHOOTING ---- 95
PARTS LIST AND DIAGRAM ---- 115

SPECIFICATIONS

TYPE			DC INVERTER (WALL TYPE)	
			INDOOR UNIT	OUTDOOR UNIT
MODEL			RAK-65NH5A	RAC-65NH5
POWER SOURCE			1 PHASE, 50 Hz, 220 – 240V	
COOLING	TOTAL INPUT	(W)	2,300	
	TOTAL AMPERES	(A)	10.60 – 9.70	
	CAPACITY	(kW)	6.05 (0.90 – 6.50)	
		(B.T.U./h)	20,660	
HEATING	TOTAL INPUT	(W)	2,400	
	TOTAL AMPERES	(A)	11.0 – 10.10	
	CAPACITY	(kW)	7.05 (0.90 - 9.00)	
		(B.T.U./h)	24,060	
DIMENSIONS (mm)		W	1,030	850
		H	295	650
		D	191	298
NET WEIGHT		(kg)	11	45

※ After installation

SPECIFICATIONS AND PARTS ARE SUBJECT TO CHANGE FOR IMPROVEMENT

ROOM AIR CONDITIONER

INDOOR UNIT + OUTDOOR UNIT

APRIL 2008 **Refrigeration & Air-Conditioning Division**

Все каталоги и инструкции здесь: https://splitsystema48.ru/instrukcii-po-ekspluatacii-kondicionerov.html

SAFETY DURING REPAIR WORK

1. In order to disassemble and repair the unit in question, be sure to disconnect the power cord plug from the power outlet before starting the work.

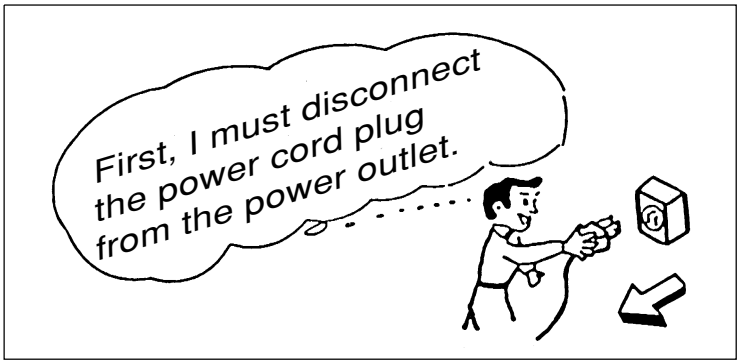

2. If it is necessary to replace any parts, they should be replaced with respective genuine parts for the unit, and the replacement must be effected in correct manner according to the instructions in the Service Manual of the unit.

> If the contacts of electrical parts are defective, replace the electrical parts without trying to repair them.

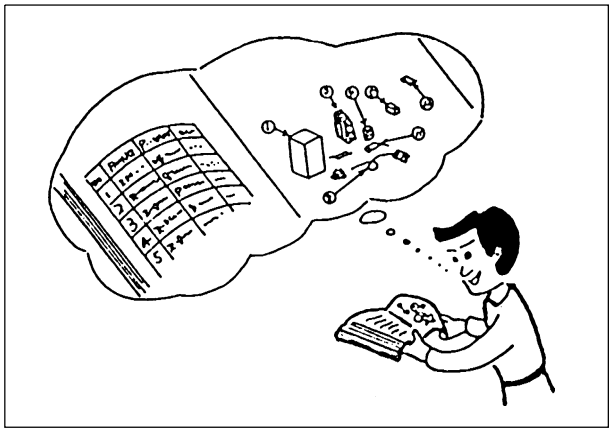

3. After completion of repairs, the initial state should be restored.

4. Lead wires should be connected and laid as in the initial state.

5. Modification of the unit by user himself should absolutely be prohibited.

6. Tools and measuring instruments for use in repairs or inspection should be accurately calibrated in advance.

7. In installing the unit having been repaired, be careful to prevent the occurence of any accident such as electrical shock, leak of current, or bodily injury due to the drop of any part.

8. To check the insulation of the unit, measure the insulation resistance between the power cord plug and grounding terminal of the unit. The insulation resistance should be 1MΩ or more as measured by a 500V DC megger.

9. The initial location of installation such as window, floor or the other should be checked for being and safe enough to support the repaired unit again.
   If it is found not so strong and safe, the unit should be installed at the initial location reinforced or at a new location.

10. Any inflammable thing should never be placed about the location of installation.

11. Check the grounding to see whether it is proper or not, and if it is found improper, connect the grounding terminal to the earth.

Все каталоги и инструкции здесь: https://splitsystema48.ru/instrukcii-po-ekspluatacii-kondicionerov.html

WORKING STANDARDS FOR PREVENTING BREAKAGE OF SEMICONDUCTORS

1. Scope
   The standards provide for items to be generally observed in carrying and handling semiconductors in relative manufacturers during maintenance and handling thereof. (They apply the same to handling of abnormal goods such as rejected goods being returned).

2. Object parts

   (1) Micro computer
   (2) Integrated circuits (IC)
   (3) Field-effect transistors (FET)
   (4) P.C. boards or the like on which the parts mentioned in (1) and (2) of this paragraph are equipped.

3. Items to be observed in handling

   (1) Use a conductive container for carrying and storing of parts. (Even rejected goods should be handled in the same way).

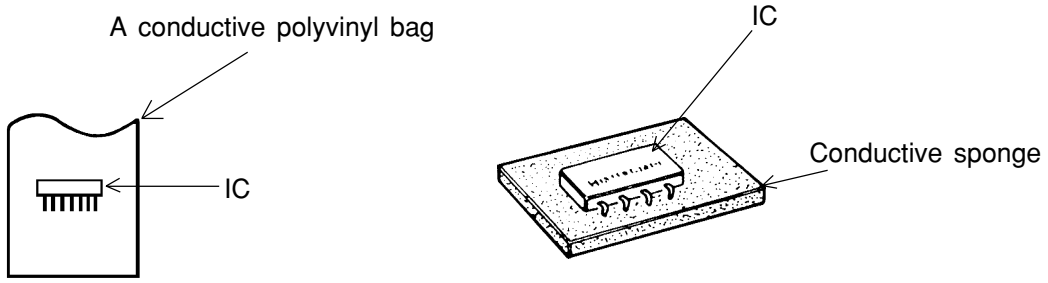

Fig. 1. Conductive Container

   (2) When any part is handled uncovered (in counting, packing and the like), the handling person must always use himself as a body earth. (Make yourself a body earth by passing one M ohm earth resistance through a ring or bracelet).

   (3) Be careful not to touch the parts with your clothing when you hold a part even if a body earth is being taken.

   (4) Be sure to place a part on a metal plate with grounding.

   (5) Be careful not to fail to turn off power when you repair the printed circuit board. At the same time, try to repair the printed circuit board on a grounded metal plate.

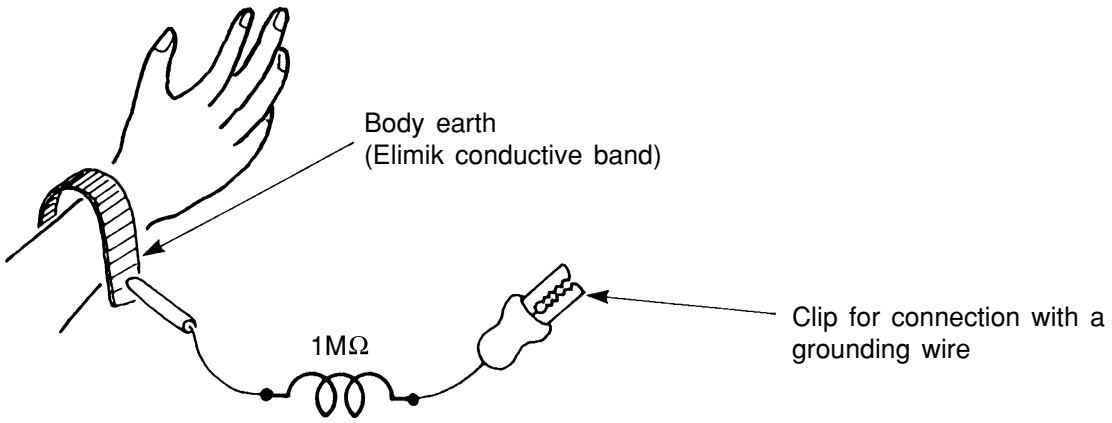

Fig. 2. Body Earth

Все каталоги и инструкции здесь: https://splitsystema48.ru/instrukcii-po-ekspluatacii-kondicionerov.html

(6) Use a three wire type soldering iron including a grounding wire.

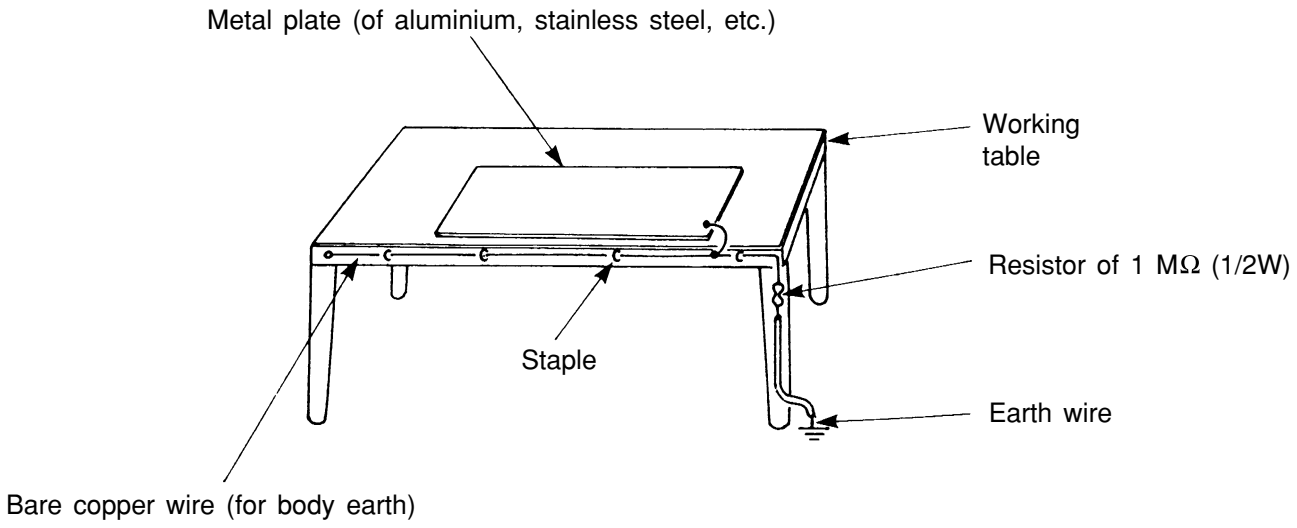

Fig. 3. Grounding of the working table

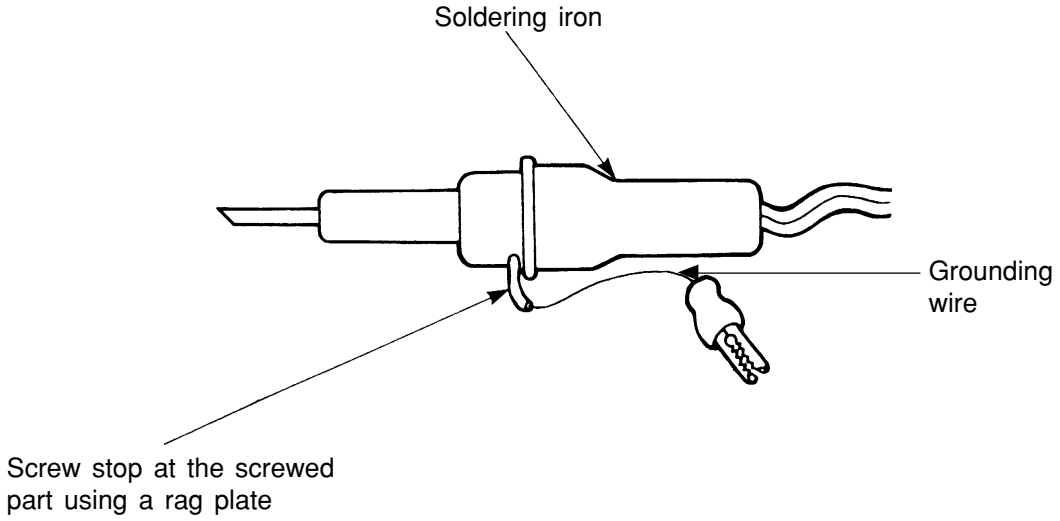

Fig. 4. Grounding a soldering iron

Use a high insulation mode (100V, 10MΩ or higher) when ordinary iron is to be used.

(7) In checking circuits for maintenance, inspection or some others, be careful not to have the test probes of the measuring instrument shortcircuit a load circuit or the like.

Все каталоги и инструкции здесь: https://splitsystema48.ru/instrukcii-po-ekspluatacii-kondicionerov.html

⚠ CAUTION

1. In quiet or stopping operation, slight flowing noise of refrigerant in the refrigerating cycle is heard occasionally, but this noise is not abnormal for the operation.

2. When it thunders near by, it is recommend to stop the operation and to disconnect the power cord plug from the power outlet for safety.

3. In the event of power failure, the air conditioner will restart automatically in the previously selected mode once the power is restored. In the event of power failure during TIMER operation, the timer will be reset and the unit will begin or stop operating under a new timer setting.

4. If the room air conditioner is stopped by adjusting thermostat, or missoperation, and re-start in a moment, there is occasion that the cooling and heating operation does not start for 3 minutes, it is not abnormal and this is the result of the operation of IC delay circuit. This IC delay circuit ensures that there is no danger of blowing fuse or damaging parts even if operation is restarted accidentally.

5. This room air conditioner should not be used at the cooling operation when the outside temperature is below –10°C (14°F).

6. This room air conditioner (the reverse cycle) should not be used when the outside temperature is below –15°C (5°F).
   If the reverse cycle is used under this condition, the outside heat exchanger is frosted and efficiency falls.

7. When the outside heat exchanger is frosted, the frost is melted by operating the hot gas system, it is not trouble that at this time fan stops and the vapour may rise from the outside heat exchanger.

Все каталоги и инструкции здесь: https://splitsystema48.ru/instrukcii-po-ekspluatacii-kondicionerov.html

SPECIFICATIONS

MODEL		RAK-65NH5A	RAC-65NH5
FAN MOTOR		PWM DC35V	40 W
FAN MOTOR CAPACITOR		NO	NO
FAN MOTOR PROTECTOR		NO	NO
COMPRESSOR		–	JU1013D5
COMPRESSOR MOTOR CAPACITOR		NO	NO
OVERLOAD PROTECTOR		NO	YES (INTERNAL)
OVERHEAT PROTECTOR		NO	YES
FUSE (for MICROPROCESSOR)		NO	3.0A
POWER RELAY		NO	G4A
POWER SWITCH		NO	NO
TEMPORARY SWITCH		YES	NO
SERVICE SWITCH		NO	YES
TRANSFORMER		NO	NO
VARISTOR		NO	450NR
NOISE SUPPRESSOR		NO	YES
THERMOSTAT		YES(IC)	YES(IC)
REMOTE CONTROL SWITCH (LIQUID CRYSTAL)		YES	NO
REFRIGERANT CHARGING VOLUME (Refrigerant R410A)	UNIT	----------	1420g
	PIPES (MAX. 30m)	WITHOUT REFRIGERANT BECAUSE COUPLING IS FLARE TYPE.	

Chargeless upto 20m, above 20m upto max 30m, charge refrigerant R410A 5 g/m.

Все каталоги и инструкции здесь: https://splitsystema48.ru/instrukcii-po-ekspluatacii-kondicionerov.html

Figure showing the installation of Indoor and Outdoor unit

CAUTION	The installation height of indoor unit must be 2.3m or more.

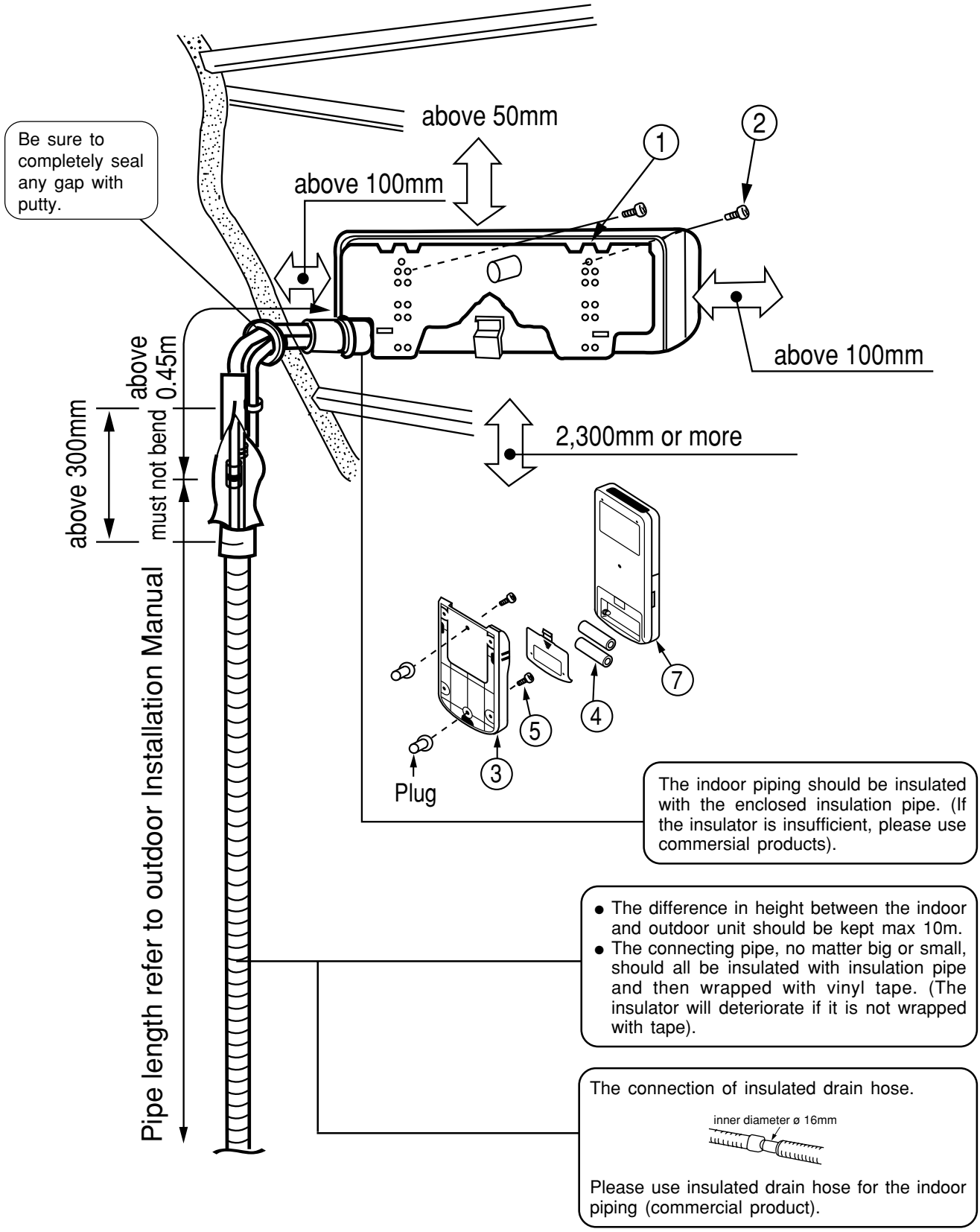

Все каталоги и инструкции здесь: https://splitsystema48.ru/instrukcii-po-ekspluatacii-kondicionerov.html

NAMES AND FUNCTIONS OF EACH PART

INDOOR UNIT

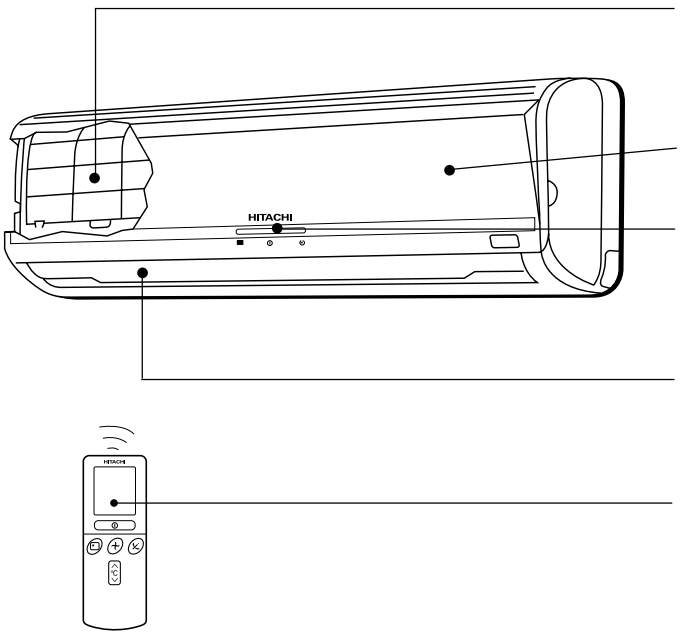

AIR FILTER
To prevent dust from coming into the indoor unit.
(Refer Instruction manual)

FRONT PANEL (AIR INLET)

INDOOR UNIT INDICATORS
Light indicator showing the operating condition.
(Refer page 8)

HORIZONTAL DEFLECTOR ● VERTICAL DEFLECTOR (AIR OUTLET)

REMOTE CONTROLLER
Send out operation signal to the indoor unit. So as to operate the whole unit.
(Refer Instruction manual)

NOTE

- Air cleansing filters are washable and can be use in 1 year time. Type number for this air cleansing filter is <SPX-CFH5>. Please use this number for ordering when you want to renew it.
- Air cleansing filter should be cleaned every month or sooner if noticeable loading occurs. When used overtime, it may loose its deodorizing function. For maximum performance, it is recommended to replace it every 1 year depending on application requirements.

MODEL NAME AND DIMENSIONS

MODEL	WIDTH (mm)	HEIGHT (mm)	DEPTH (mm)
RAK-65NH5A	1030	295	191

Все каталоги и инструкции здесь: https://splitsystema48.ru/instrukcii-po-ekspluatacii-kondicionerov.html

INDOOR UNIT INDICATORS

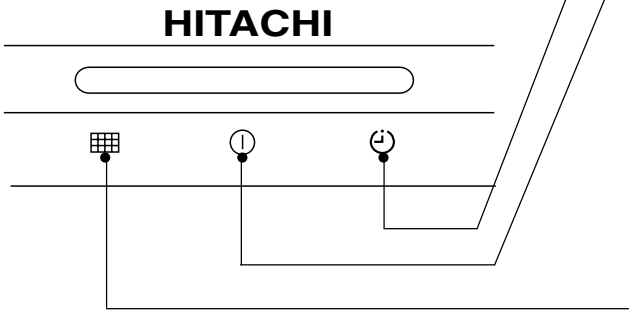

TIMER LAMP
This lamp lights when the timer is working.

OPERATION LAMP
This lamp lights during operation.
The OPERATION LAMP flashes in the following cases during heating.

(1) During preheating
For about 2–3 minutes after starting up.

(2) During defrosting
Defrosting will be performed about once an hour when frost forms on the heat exchanger of the outdoor unit, for 5–10 minutes each time.

FILTER LAMP
When the device is operated for a total of about 200 hours, the FILTER lamp lights to indicate that it is time to clean the filter. The lamp goes out when the " (AUTO SWING)" button is pressed while the device is on "STANDBY MODE".

OPERATION INDICATOR

- This figure shows the opening condition of front panel. Refer to Instruction manual in relation to how to open or close the front panel.

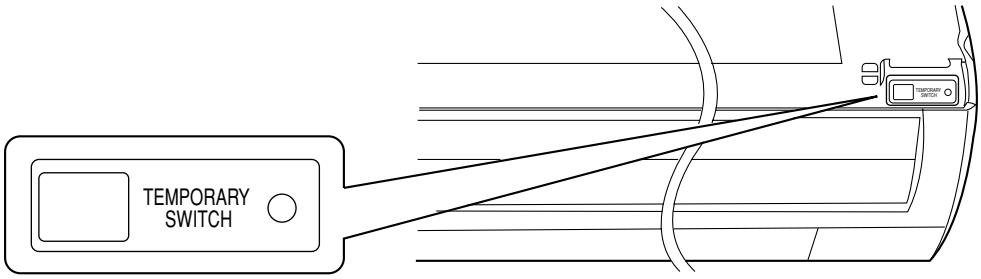

TEMPORARY SWITCH

Use this switch to start and stop when the remote controller does not work. [Use non-conductor stick (example: toothpick)]

- By pressing the temporary switch, the operation is done in previously set operation mode.
- When the operation is done using the temporary switch after the power source is turned off and turn on again, the operation is done in automatic mode.

Все каталоги и инструкции здесь: https://splitsystema48.ru/instrukcii-po-ekspluatacii-kondicionerov.html

Note

- Avoid to use the room air conditioner for cooling operation when the outside temperature is below 21°C (70°F).
  The recommended maximum and minimum operating temperatures of the hot and cold sides should be as below:

		Cooling		Heating	
		Minimum	Maximum	Minimum	Maximum
Indoor	Dry bulb °C	21	32	20	27
	Wet bulb °C	15	23	12	19
Outdoor	Dry bulb °C	21	43	2	21
	Wet bulb °C	15	26	1	15

MEMO

Все каталоги и инструкции здесь: https://splitsystema48.ru/instrukcii-po-ekspluatacii-kondicionerov.html

SAFETY PRECAUTION

- Please read the “Safety Precaution” carefully before operating the unit to ensure correct usage of the unit.
- Pay special attention to signs of “ ⚠ **Warning**” and “ ⚠ **Caution**”. The “Warning” section contains matters which, if not observed strictly, may cause death or serious injury. The “Caution” section contains matters which may result in serious consequences if not observed properly. Please observe all instructions strictly to ensure safety.
- The sign indicate the following meanings.

Make sure to connect earth line.	The sign in the figure indicates prohibition.
Indicates the instructions that must be followed.	

- Please keep this manual after reading.

PRECAUTIONS DURING INSTALLATION

WARNING	• Do not reconstruct the unit. Water leakage, fault, short circuit or fire may occur if you reconstruct the unit by yourself.	
	• Please ask your sales agent or qualified technician for the installation of your unit. Water leakage, short circuit or fire may occur if you install the unit by yourself.	
	• Please use earth line. Do not place the earth line near water or gas pipes, lightning-conductor, or the earth line of telephone. Improper installation of earth line may cause electric shock.	
	• Be sure to use the specified piping set for R410A. Otherwise, this may result in broken copper pipes or faults.	
CAUTION	• A circuit breaker should be installed depending on the mounting site of the unit. Without a circuit breaker, the danger of electric shock exists.	
	• Do not install near location where there is flammable gas. The outdoor unit may catch fire if flammable gas leaks around it.	
	• Please ensure smooth flow of water when installing the drain hose.	

PRECAUTIONS DURING SHIFTING OR MAINTENANCE

WARNING	• Should abnormal situation arises (like burning smell), please stop operating the unit and turn off the circuit breaker. Contact your agent. Fault, short circuit or fire may occur if you continue to operate the unit under abnormal situation.	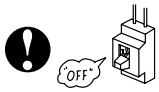
	• Please contact your agent for maintenance. Improper self maintenance may cause electric shock and fire.	
	• Please contact your agent if you need to remove and reinstall the unit. Electric shock or fire may occur if you remove and reinstall the unit yourself improperly.	
	• If the supply cord is damaged, it must be replaced by the special cord obtainable at authorized service/parts centers.	

PRECAUTIONS DURING OPERATION

WARNING	• Avoid an extended period of direct air flow for your health.	
	• Do not insert a finger, a rod or other objects into the air outlet or inlet. As the fan is rotating at a high speed, it will cause injury. Before cleaning, be sure to stop the operation and turn the breaker OFF.	
	• Do not use any conductor as fuse wire, this could cause fatal accident.	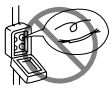
	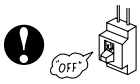 • During thunder storm, disconnect and turn off the circuit breaker.	

Все каталоги и инструкции здесь: https://splitsystema48.ru/instrukcii-po-ekspluatacii-kondicionerov.html

PRECAUTIONS DURING OPERATION

CAUTION

- The product shall be operated under the manufacturer specification and not for any other intended use.

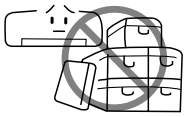

- Do not attempt to operate the unit with wet hands, this could cause fatal accident.

- When operating the unit with burning equipments, regularly ventilate the room to avoid oxygen insufficiency.

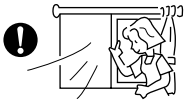

- Do not direct the cool air coming out from the air-conditioner panel to face household heating apparatus as this may affect the working of apparatus such as the electric kettle, oven etc.

- Please ensure that outdoor mounting frame is always stable, firm and without defect. If not, the outdoor unit may collapse and cause danger.

- Do not splash or direct water to the body of the unit when cleaning it as this may cause short circuit.

- Do not use any aerosol or hair sprays near the indoor unit. This chemical can adhere on heat exchanger fin and blocked the evaporation water flow to drain pan. The water will drop on tangential fan and cause water splashing out from indoor unit.

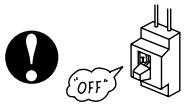

- Please switch off the unit and turn off the circuit breaker during cleaning, the high-speed fan inside the unit may cause danger.

- Turn off the circuit breaker if the unit is not to be operated for a long period.

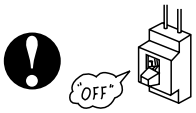

- Do not climb on the outdoor unit or put objects on it.

- Do not put water container (like vase) on the indoor unit to avoid water dripping into the unit. Dripping water will damage the insulator inside the unit and causes short-circuit.

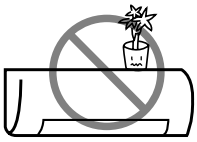

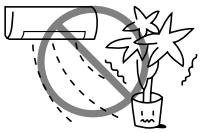

- Do not place plants directly under the air flow as it is bad for the plants.

- When operating the unit with the door and windows opened, (the room humidity is always above 80%) and with the air deflector facing down or moving automatically for a long period of time, water will condense on the air deflector and drips down occasionally. This will wet your furniture. Therefore, do not operate under such condition for a long time.
- If the amount of heat in the room is above the cooling or heating capability of the unit (for example: more people entering the room, using heating equipments and etc.), the preset room temperature cannot be achieved.

- This appliance is not intended for use by young children or infirm persons unless they have been adequately supervised by a responsible person to ensure that they can use the appliance safely.
- Young children should be supervised to ensure that they do not play with the appliance.

Все каталоги и инструкции здесь: https://splitsystema48.ru/instrukcii-po-ekspluatacii-kondicionerov.html

NAMES AND FUNCTIONS OF REMOTE CONTROL UNIT

REMOTE CONTROLLER

- This controls the operation of the indoor unit. The range of control is about 7 meters. If indoor lighting is controlled electronically, the range of control may be shorter.
  This unit can be fixed on a wall using the fixture provided. Before fixing it, make sure the indoor unit can be controlled from the remote controller.
- Handle the remote controller with care. Dropping it or getting it wet may compromise its signal transmission capability.
- After new batteries are inserted into the remote controller, the unit will initially require approximately 10 seconds to respond to commands and operate.

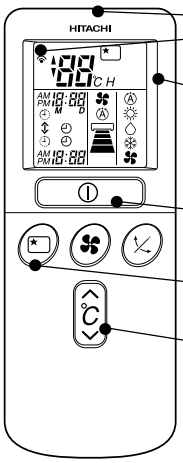

- **Signal emitting window/transmission sign**
  Point this window toward the indoor unit when controlling it.
  The transmission sign blinks when a signal is sent.
- **Display**
  This indicates the room temperature selected, current time, timer status, function and intensity of circulation selected.
- **START/STOP button**
  Press this button to start operation. Press it again to stop operation.
- **SLEEP button**
  Use this button to set the sleep timer.
- **TEMPERATURE buttons**
  Use these buttons to raise or lower the temperature setting. (Keep pressed, and the value will change more quickly.)

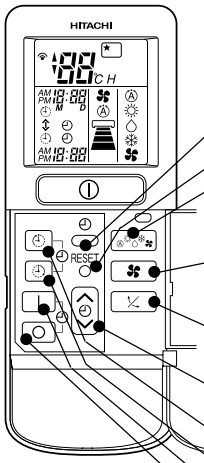

- **TIME button**
  Use this button to set and check the time and date.
- **RESET buttons**
- **FUNCTION selector**
  Use this button to select the operating mode. Every time you press it, the mode will change from Ⓐ (AUTO) to ☼ (HEAT) to ○ (DEHUMIDIFY) to ❄ (COOL) and to ✤ (FAN) cyclically.
- **FAN SPEED selector**
  This determines the fan speed. Every time you press this button, the intensity of circulation will change from Ⓐ (AUTO) to (HI) to (MED) to (LOW) to (SILENT) (This button allows selecting the optimal or preferred fan speed for each operation mode).
- **AUTO SWING button**
  Controls the angle of the horizontal air deflector.
- **TIMER control**
  Use this button to set the timer.
- **OFF-TIMER button** Select the turn OFF time.
- **ON-TIMER button** Select the turn ON time.
- **RESERVE button** Time setting reservation.
- **CANCEL button** Cancel time reservation.

Ⓐ	AUTO
☼	HEAT
○	DEHUMIDIFY
❄	COOL
✤	FAN
	FAN SPEED SILENT LOW MED HI
★	SLEEPING
○	STOP (CANCEL)
I	START (RESERVE)
⏻	START/STOP
◷	TIME
◷	TIMER SET
◷ ◷ ◷	TIMER SELECTOR ON TIMER OFF TIMER
	AUTO SWING

Precautions for Use

- Do not put the remote controller in the following places.
  - Under direct sunlight.
  - In the vicinity of a heater.
- Handle the remote controller carefully. Do not drop it on the floor, and protect it from water.
- Once the outdoor unit stops, it will not restart for about 3 minutes (unless you turn the power switch off and on or unplug the power cord and plug it in again).
  This is to protect the device and does not indicate a failure.
- If you press the FUNCTION selector button during operation, the device may stop for about 3 minutes for protection.

Все каталоги и инструкции здесь: https://splitsystema48.ru/instrukcii-po-ekspluatacii-kondicionerov.html

VARIOUS FUNCTIONS

■ Auto Restart Control

- If there is a power failure, operation will be automatically restarted when the power is resumed with previous operation mode and airflow direction.
  (As the operation is not stopped by remote controller.)
- If you intend not to continue the operation when the power is resumed, switch off the power supply.
  When you switch on the circuit breaker, the operation will be automatically restarted with previous operation mode and airflow direction.
  Note: 1. If you do not require Auto Restart Control, please consult your sales agent or OFF by remote control.
  2. Auto Restart Control is not available when Timer or Sleep Timer mode is set.

AUTOMATIC OPERATION

The device will automatically determine the mode of operation, HEAT, COOL or DEHUMIDIFY depending on the current room temperature. The selected mode of operation will change when the room temperature varies. However the mode of operation will not change when indoor unit connected to multi type outdoor unit.

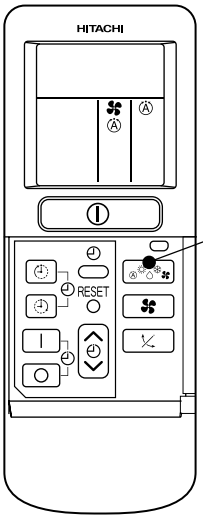

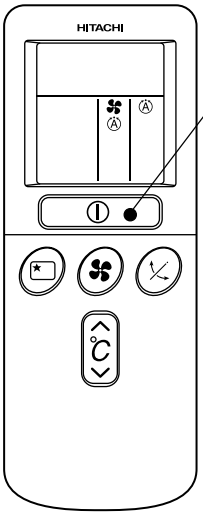

1 Press the FUNCTION selector so that the display indicates the Ⓐ (AUTO) mode of operation.

- When AUTO has been selected, the device will automatically determine the mode of operation, HEAT, COOL or DEHUMIDIFY depending on the current room temperature. However the mode of operation will not change when indoor unit connected to multi type outdoor unit.
- If the mode automatically selected by the unit is not satisfactory, manually change the mode setting (heat, dehumidify, cool or fan).

START / STOP Press the Ⓘ (START/STOP) button.
Operation starts with a beep.
Press the button again to stop operation.

■ As the settings are stored in memory in the remote controller, you only have to press the Ⓘ (START/STOP) button next time.

You can raise or lower the temperature setting as necessary by maximum of 3°C.

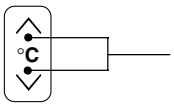

Press the temperature button and the temperature setting will change by 1°C each time.

- The preset temperature and the actual room temperature may vary somewhat depending on conditions.
- The display does not indicate the preset temperature in the AUTO mode. If you change the setting, the indoor unit will produce a beep.

Press the ✤ (FAN SPEED) button, AUTO, LOW and SILENT is available.

Все каталоги и инструкции здесь: https://splitsystema48.ru/instrukcii-po-ekspluatacii-kondicionerov.html

HEATING OPERATION

- Use the device for heating when the outdoor temperature is under 21°C.
  When it is too warm (over 21°C), the heating function may not work in order to protect the device.
- In order to keep reliability of the device, please use this device above -15°C of the outdoor temperature.

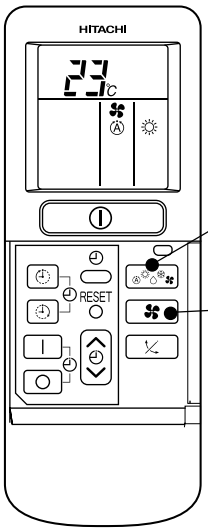

1 Press the FUNCTION selector so that the display indicates ☼ (HEAT).

2 Set the desired FAN SPEED with the ✣ (FAN SPEED) button (the display indicates the setting).

- Ⓐ (AUTO) : The fan speed changes automatically according to the temperature of the air which blows out.
- (HI) : Economical as the room will become warm quickly.
  But you may feel a chill at the beginning.
- (MED) : Fan speed slow.
- (LOW) : Fan speed slower.
- (SILENT) : Fan speed ultra slower.

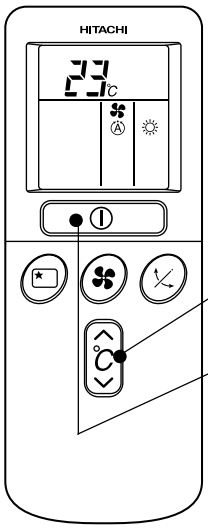

3 Set the desired room temperature with the TEMPERATURE buttons (the display indicates the setting).

The temperature setting and the actual room temperature may vary somewhat depending on conditions.

START / STOP Press the ⏻ (START/STOP) button. Heating operation starts with a beep. Press the button again to stop operation.

■ As the settings are stored in memory in the remote controller, you only have to press the ⏻ (START/STOP) button next time.

■ Defrosting

Defrosting will be performed about once an hour when frost forms on the heat exchange of the outdoor unit, for 5~10 minutes each time.
During defrosting operation, the operation lamp blinks in cycle of 3 seconds on and 0.5 second off.
The maximum time for defrosting is 20 minutes.
However, if it is connected to multi type outdoor unit, the maximum time for defrosting is 15 minutes.
(If the piping length used is longer than usual, frost will likely to form.)

Все каталоги и инструкции здесь: https://splitsystema48.ru/instrukcii-po-ekspluatacii-kondicionerov.html

DEHUMIDIFYING OPERATION

Use the device for dehumidifying when the room temperature is over 16°C.
When it is under 15°C, the dehumidifying function will not work.

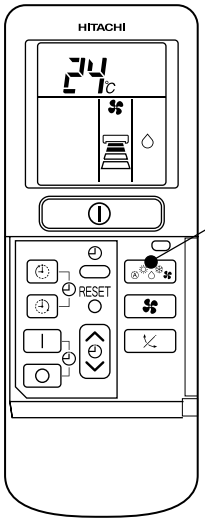

1 Press the FUNCTION selector so that the display indicates ◯ (DEHUMIDIFY).
The FAN SPEED is set at LOW or SILENT.

2 Set the desired room temperature with the TEMPERATURE button (the display indicates the setting).

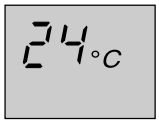

The range of 20-26˚C is recommended as the room temperature for dehumidifying.

START / STOP Press the ⏻ (START/STOP) button. Dehumidifying operation starts with a beep. Press the button again to stop operation.

■ As the settings are stored in memory in the remote controller, you only have to press the ⏻ (START/STOP) button next time.

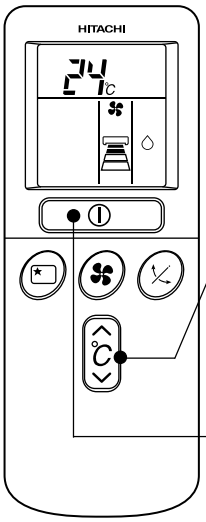

■ Dehumidifying Function

- When the room temperature is higher than the temperature setting: The device will dehumidify the room, reducing the room temperature to the preset level.
  When the room temperature is lower than the temperature setting: Dehumidifying will be performed at the temperature setting slightly lower than the current room temperature, regardless of the temperature setting. The function will stop (the indoor unit will stop emitting air) as soon as the room temperature becomes lower than the setting temperature.
- The preset room temperature may not be reached depending on the number of people present in the room or other room conditions.

Все каталоги и инструкции здесь: https://splitsystema48.ru/instrukcii-po-ekspluatacii-kondicionerov.html

COOLING OPERATION

Use the device for cooling when the outdoor temperature is 21~43°C.
If in doors humidity is very high (80%), some dew may form on the air outlet grille of the indoor unit.

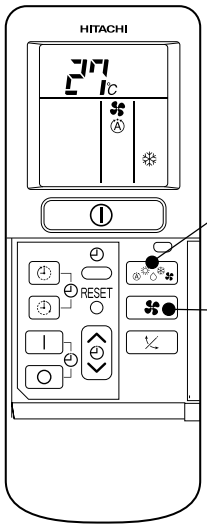

1 Press the FUNCTION selector so that the display indicates ❄ (COOL).

2 Set the desired FAN SPEED with the ✤ (FAN SPEED) button (the display indicates the setting).

- Ⓐ (AUTO) : The FAN SPEED is HI at first and varies to MED automatically when the preset temperature has been reached.
- (HI) : Economical as the room will become cool quickly.
- (MED) : Fan speed slow.
- (LOW) : Fan speed slower.
- (SILENT) : Fan speed ultra slower.

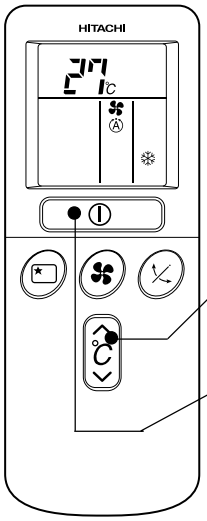

3 Set the desired room temperature with the TEMPERATURE button (the display indicates the setting).

The temperature setting and the actual room temperature may vary some how depending on conditions.

START / STOP Press the ⏻ (START/STOP) button. Cooling operation starts with a beep. Press the button again to stop operation. The cooling function does not start if the temperature setting is higher than the current room temperature (even though the ⏻ (OPERATION) lamp lights). The cooling function will start as soon as you set the temperature below the current room temperature.

■ As the settings are stored in memory in the remote controller, you only have to press the ⏻ (START/STOP) button next time.

Все каталоги и инструкции здесь: https://splitsystema48.ru/instrukcii-po-ekspluatacii-kondicionerov.html

FAN OPERATION

You can use the device simply as an air circulator. Use this function to dry the interior of the indoor unit at the end of summer.

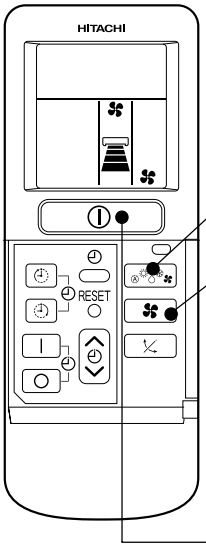

1 Press the FUNCTION selector so that the display indicates ✽ (FAN).

2 Press the ✽ (FAN SPEED) button.

- (HI) : The strongest air blow.
- (MED) : Fan speed slow.
- (LOW) : Fan speed slower.
- (SILENT) : Fan speed ultra slower.

START / STOP Press the ⏻ (START/STOP) button. Fan operation starts with a beep. Press the button again to stop operation.

FAN SPEED (AUTO) ····· When the AUTO fan speed mode is set in the cooling/heating operation:

For the heating operation	● The fan speed will automatically change according to the temperature of discharged air. ● When the difference of room temperature and setting temperature is large, fan starts to run at HI speed. ● When the room temperature reaches setting temperature, fan speed changes to LOW automatically.
For the cooling operation	● When the difference of room temperature and setting temperature is large, fan starts to run at HI speed. ● After room temperature reaches the preset temperature, the cooling operation, which changes the fan speed and room temperature to obtain optimum conditions for natural healthful cooling will be performed.

Все каталоги и инструкции здесь: https://splitsystema48.ru/instrukcii-po-ekspluatacii-kondicionerov.html

HOW TO SET THE TIMER

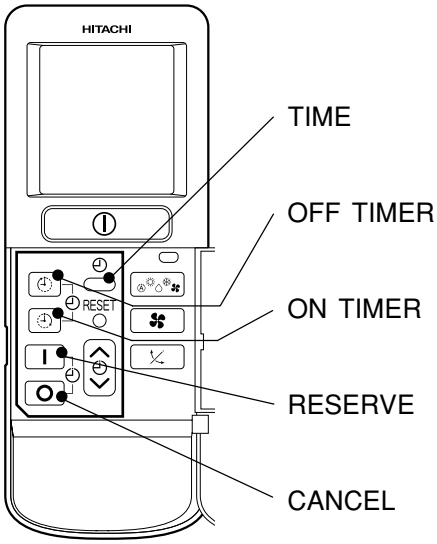

Time

After you change the batteries;

1 Set the (TIME) button.

OFF-Timer

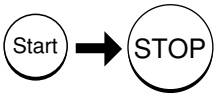

You can set the device to turn off at the preset time.

1 Press the (OFF-TIMER) button. The (OFF) mark blinks on the display.

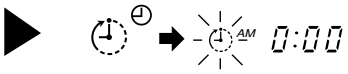

ON-Timer

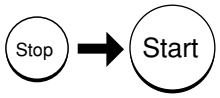

- The device will turn on at the designated times.

1 Press the (ON-TIMER) button the (ON) mark blinks on the display.

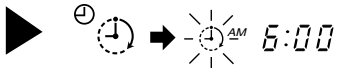

ON/OFF-Timer

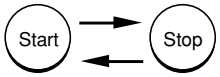

- The device will turn on (off) and off (on) at the designated times.
- The switching occurs first at the preset time that comes earlier.
- The arrow mark appearing on the display indicates the sequence of switching operations.

1 Press the (ON-OFF) button so that the (OFF) mark blinks.

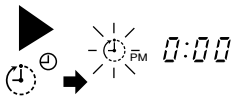

2 Set the turn-off time with the TIMER control button.
Press the (RESERVE) button.

3 Press the (ON-TIMER) button so that the (OFF) mark lights and the (ON) mark blinks.

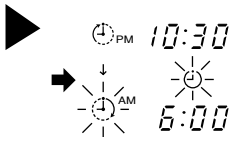

How to Cancel Reservation

Point the signal window of the remote controller toward the indoor unit, and press the ○ (CANCEL) button.
The (RESERVED) sign goes out with a beep and the (TIMER) lamp turns off on the indoor unit.

NOTE

You can set only one of the OFF-timer, ON-timer and ON/OFF-timer.

Все каталоги и инструкции здесь: https://splitsystema48.ru/instrukcii-po-ekspluatacii-kondicionerov.html

2 Press the (TIME) button.

3 Set the current time with the TIMER control button.

4 Press the (TIME) button again. The time indication starts lighting instead of flashing.

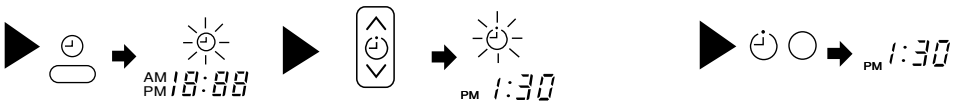

- The time indication will disappear automatically in 10 second.
- To check the current time setting, press the (TIME) button twice.

The setting of the current time is now complete.

Example: The current time is 1:30 p.m.

2 Set the turn-off time with the TIMER control button.

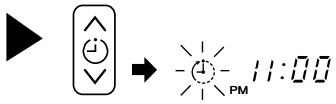

3 Point the signal window of the remote controller toward the indoor unit, and press the (RESERVE) button.

The (OFF) mark starts lighting instead of flashing and the sign (RESERVED) lights. A beep occurs and the (TIMER) lamp lights on the indoor unit.

Example: The device will turn off at 11:00p.m.

The setting of turn-off time is now complete.

2 Set the turn-on time with the TIMER control button.

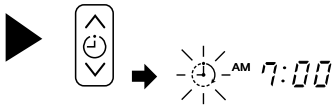

3 Point the signal window of the remote controller toward the indoor unit, and press the (RESERVE) button.

The (ON) mark starts lighting instead of flashing and the (RESERVED) sign lights. A beep occurs and the (TIMER) lamp lights on the indoor unit.

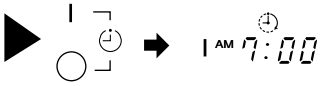

Example:
The device will turn on at 7:00 a.m.
The setting of the turn-on time is now complete.

4 Set the turn-on time with the TIMER control button.

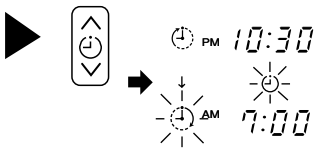

5 Point the signal window of the remote controller toward the indoor unit, and press the (RESERVE) button.

The (ON) mark starts lighting instead of flashing and the (RESERVED) sign lights. A beep occurs and the (TIMER) lamp lights on the indoor unit.

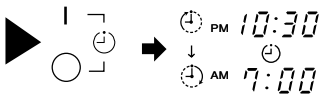

Example:
The device will turn off at 10:30 p.m. and it will be turned on at 7:00 a.m.
The settings of the turn-on/off times are now complete.

- The timer may be used in three ways: off-timer, on-timer, and ON/OFF (OFF/ON)-timer. Set the current time at first because it serves as a reference.
- As the time settings are stored in memory in the remote controller, you only have to press the (RESERVE) button in order to use the same settings next time.

Все каталоги и инструкции здесь: https://splitsystema48.ru/instrukcii-po-ekspluatacii-kondicionerov.html

HOW TO SET THE SLEEP TIMER

Set the current time at first if it is not set before (see the pages for setting the current time). Press the ⊡ (SLEEP) button, and the display changes as shown below.

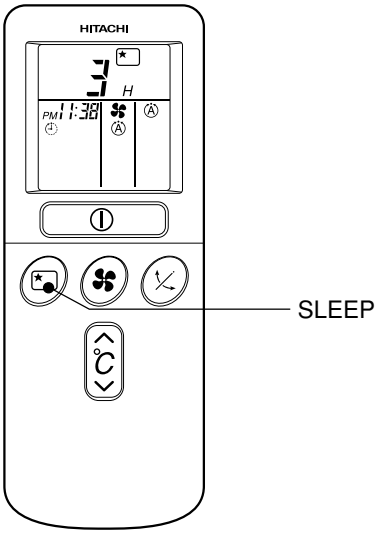

Mode	Indication
Sleep timer	→ 1 hour → 2 hours → 3 hours → 7 hours → Sleep timer off →

Sleep Timer: The device will continue working for the designated number of hours and then turn off.
Point the signal window of the remote controller toward the indoor unit, and press the SLEEP button.
The timer information will be displayed on the remote controller. The TIMER lamp lights with a beep from the indoor unit. When the sleep timer has been set, the display indicates the turn-off time.

Example: If you set 3 hours sleep time at 11:38 p.m., the turn-off time is 2:38 a.m.

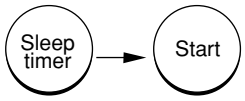

The device will be turned off by the sleep timer and turned on by on-timer.

1 Set the ON-timer.

2 Press the ⊡ (SLEEP) button and set the sleep timer.

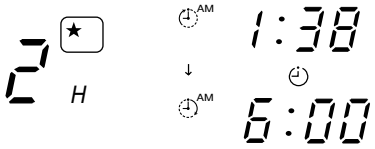

For heating:

In this case, the device will turn off in 2 hours (at 1:38 a.m.) and it will be turned on 6:00 next morning.

How to Cancel Reservation

Point the signal window of the remote controller toward the indoor unit, and press the ○ (CANCEL) button.
The ◷ (RESERVED) sign goes out with a beep and the ◷ (TIMER) lamp turns off on the indoor unit.

Все каталоги и инструкции здесь: https://splitsystema48.ru/instrukcii-po-ekspluatacii-kondicionerov.html

HOW TO EXCHANGE THE BATTERIES IN THE REMOTE CONTROLLER

1 Remove the cover as shown in the figure and take out the old batteries.

2 Install the new batteries.
The direction of the batteries should match the marks in the case.

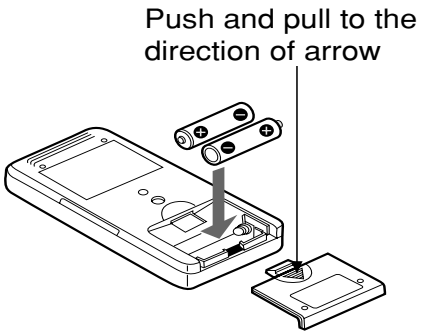

⚠ CAUTION

1. Do not use new and old batteries, or different kinds of batteries together.
2. Take out the batteries when you do not use the remote controller for 2 or 3 months.

TEMPORARY SWITCH

If the remote controller does not work due to battery failure, press this switch to start and stop operation.

- This temporary operation will be at the setting made most recently. (The unit will immediately go into automatic operation once power is switched on.)

CIRCUIT BREAKER

When you do not use the room air conditioner, set the circuit breaker to “OFF”.

Все каталоги и инструкции здесь: https://splitsystema48.ru/instrukcii-po-ekspluatacii-kondicionerov.html

Suitable Room Temperature

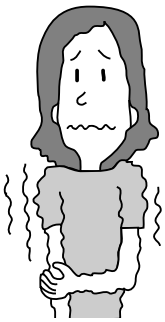

⚠ Warning
Freezing temperature is bad for health and a waste of electric power.

Install curtain or blinds

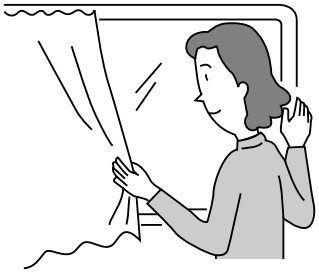

It is possible to reduce heat entering the room through windows.

Ventilation

⚠ Caution
Do not close the room for a long period of time. Occasionally open the door and windows to allow the entrance of fresh air.

Effective Usage Of Timer

At night, please use the “OFF or ON timer operation mode”, together with your wake up time in the morning. This will enable you to enjoy a comfortable room temperature. Please use the timer effectively.

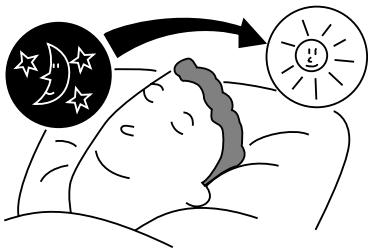

Do Not Forget To Clean The Air Filter

Dusty air filter will reduce the air volume and the cooling efficiency. To prevent from wasting electric energy, please clean the filter every 2 weeks.

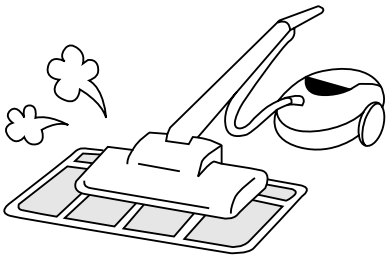

Please Adjust Suitable Temperature For Baby And Children

Please pay attention to the room temperature and air flow direction when operating the unit for baby, children and old folks who have difficulty in movement.

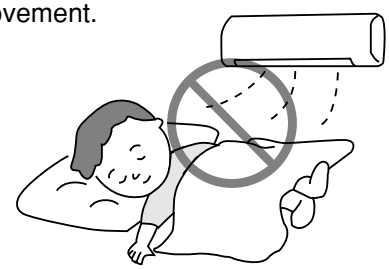

Все каталоги и инструкции здесь: https://splitsystema48.ru/instrukcii-po-ekspluatacii-kondicionerov.html

The Air Conditioner And The Heat Source In The Room

⚠ Caution

If the amount of heat in the room is above the cooling capability of the air conditioner (for example: more people entering the room, using heating equipments and etc.), the preset room temperature cannot be achieved.

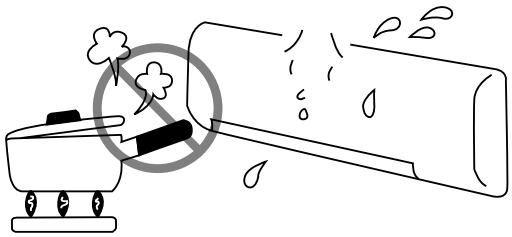

Not Operating For A Long Time

When the indoor unit is not to be used for a long period of time, please switch off the power from the mains. If the power from mains remains "ON", the indoor unit still consumes about 8W in the operation control circuit even if it is in "OFF" mode.

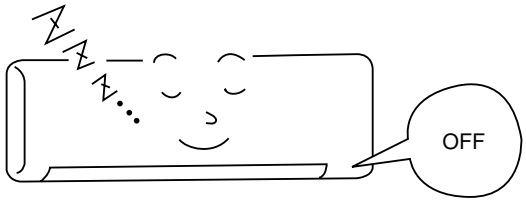

When Lightning Occurs

⚠ Warning

To protect the whole unit during lightning, please stop operating the unit and remove the plug from the socket.

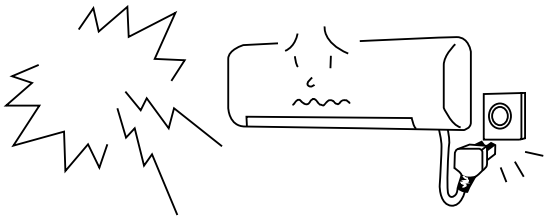

Interference From Electrical Products

⚠ Caution

To avoid noise interference, please place the indoor unit and its remote controller at least 1m away from electrical products.

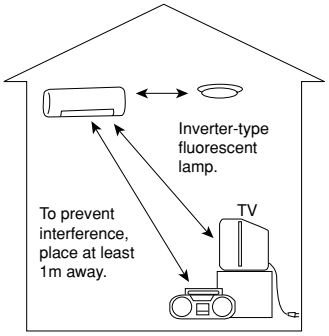

Все каталоги и инструкции здесь: https://splitsystema48.ru/instrukcii-po-ekspluatacii-kondicionerov.html

ATTACHING THE AIR CLEANSING FILTERS

⚠ CAUTION

Cleaning and maintenance must be carried out only by qualified service personal. Before cleaning, stop operation and switch off the power supply.

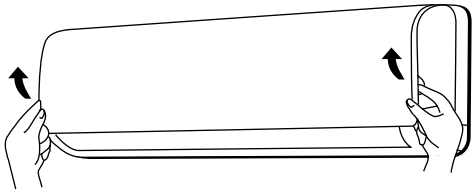

1 **Open the front panel.**

- Pull up the front panel by holding it at both sides with both hands.

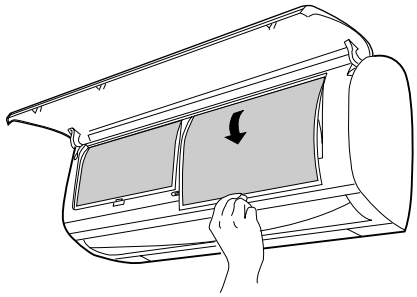

2 **Remove the filter.**

- Push upward to release the claws and pull out the filter.

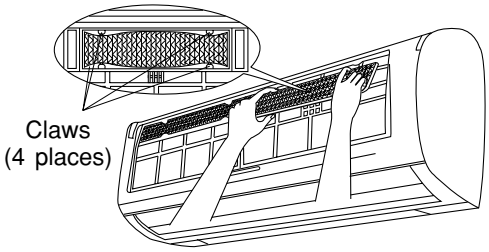

3 **Attaching the air cleansing filters to the filter.**

- Attach the air cleansing filters to the frame by gently compress its both sides and release after insertion into filter frame.

⚠ CAUTION

Do not bend the air cleansing filter as it may cause damage to the structure.

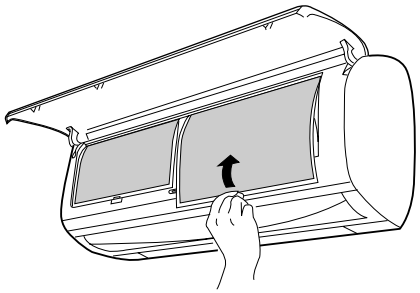

4 **Attach the filters.**

- Attach the filters by ensuring that the surface written “FRONT” is facing front.
- After attaching the filters, push the front panel at three arrow portion as shown in figure and close it.

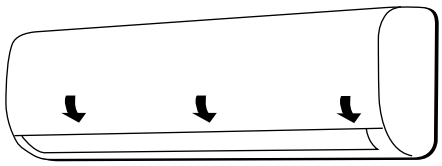

NOTE

- In case of removing the air cleansing filters, please follow the above procedures.
- The cooling capacity is slightly weakened and the cooling speed becomes slower when the air cleansing filters are used. So, set the fan speed to "HIGH" when using it in this condition.
- Do not operate the air conditioner without filter. Dust may enter the air conditioner and fault may occur.

Все каталоги и инструкции здесь: https://splitsystema48.ru/instrukcii-po-ekspluatacii-kondicionerov.html

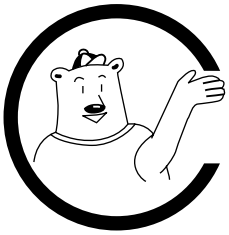

MAINTENANCE

⚠ CAUTION

Cleaning and maintenance must be carried out only by qualified service personal. Before cleaning, stop operation and switch off the power supply.

1. AIR FILTER

Clean the air filter, as it removes dust inside the room. In case the air filter is full of dust, the air flow will decrease and the cooling capacity will be reduced. Further, noise may occur. Be sure to clean the filter following the procedure below.

PROCEDURE

1 Open the front panel and remove the filter
- Gently lift and remove the air cleansing filter from the air filter frame.

2 Vacuum dust from the air filter and air cleansing filter using vacuum cleaner. If there is too much dust, air filter only rinse under running tap water and gently brush it with soft bristle brush. Allow filters to dry in shade.

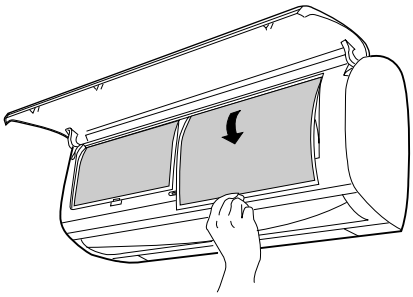

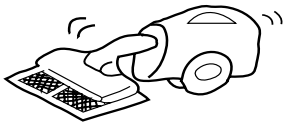

3
- Re-insert the air cleansing filter to the filter frame. Set the filter with “FRONT” mark facing front, and slot them into the original state.
- After attaching the filters, push the front panel at three arrow portions as shown in figure and close it.

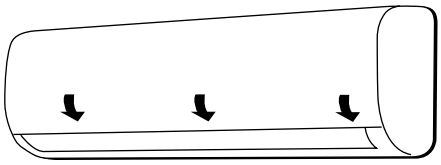

⚠ CAUTION

- Do not wash with hot water at more than 40°C. The filter may shrink.
- When washing it, shake off moisture completely and dry it in the shade; do not expose it directly to the sun. The filter may shrink.
- Do not use detergent on the air cleansing filter as some detergent may deteriorate the filter electrostatic performance.

Все каталоги и инструкции здесь: https://splitsystema48.ru/instrukcii-po-ekspluatacii-kondicionerov.html

2. Washable Front Panel

- Remove the front panel and wash with clean water.
  Wash it with a soft sponge.
  After using neutral detergent, wash thoroughly with clean water.

- When front panel is not removed, wipe it with a soft dry cloth. Wipe the remote controller thoroughly with a soft dry cloth.

- Wipe the water thoroughly.
  If water remains at indicators or signal receiver of indoor unit, it causes trouble.

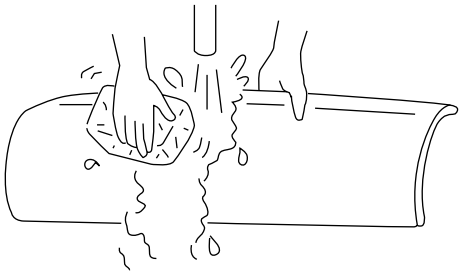

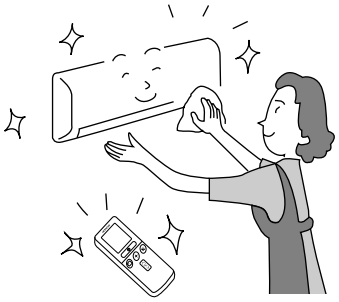

Method of removing the front panel.
Be sure to hold the front panel with both hands to detach and attach it.

Removing the Front Panel

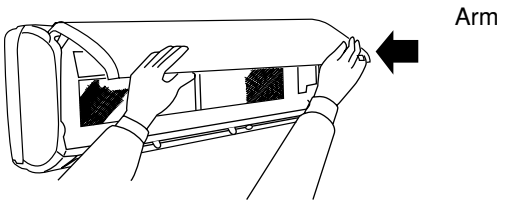

- When the front panel is fully opened with both hands, push the right arm to the inside to release it, and while closing the front panel slightly, put it out forward.

Attaching the Front Panel

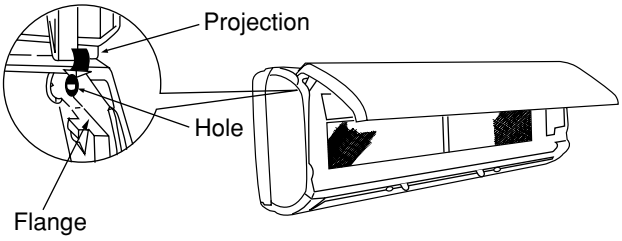

- Move the projections of the left and right arms into the **Flanges** in the unit and securely insert them into the holes.

⚠ CAUTION

- Do not splash or direct water to the body of the unit when cleaning it as this may cause short circuit.
- Never use hot water (above 40°C), benzine, gasoline, acid, thinner or a brush, because they will damage the plastic surface and the coating.

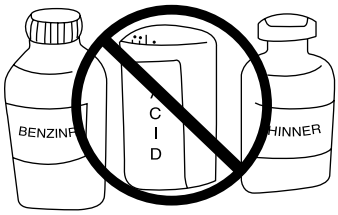

Все каталоги и инструкции здесь: https://splitsystema48.ru/instrukcii-po-ekspluatacii-kondicionerov.html

⚠ CAUTION

Cleaning and maintenance must be carried out only by qualified service personal. Before cleaning, stop operation and switch off the power supply.

3. MAINTENANCE AT BEGINNING OF LONG OFF PERIOD

- Running the unit setting the operation mode to ✽ (FAN) and the fan speed to HI for about half a day on a fine day, and dry the whole of the unit.
- Switch off the power plug.

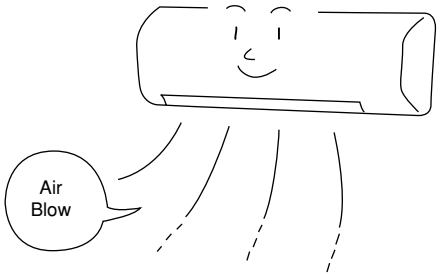

REGULAR INSPECTION

PLEASE CHECK THE FOLLOWING POINTS BY QUALIFIED SERVICE PERSONAL EITHER EVERY HALF YEARLY OR YEARLY. CONTACT YOUR SALES AGENT OR SERVICE SHOP.

1	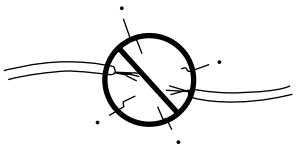	Is the earth line disconnected or broken?
2	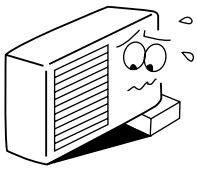	Is the mounting frame seriously affected by rust and is the outdoor unit tilted or unstable?
3	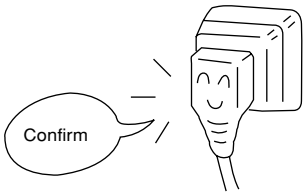	Is the plug of power line firmly plugged into the socket? (Please ensure no loose contact between them).

Все каталоги и инструкции здесь: https://splitsystema48.ru/instrukcii-po-ekspluatacii-kondicionerov.html

WHEN ASKING FOR SERVICE, CHECK THE FOLLOWING POINTS.

CONDITION	CHECK THE FOLLOWING POINTS
If the remote controller is not transmitting a signal. Remote controller display is dim or blank.)	● Do the batteries need replacement? ● Is the polarity of the inserted batteries correct?
When it does not operate	● Is the fuse all right? ● Is the voltage extremely high or low? ● Is the circuit breaker “ON”? ● Is the setting of operation mode different from other indoor units?
When it does not cool well When it does not hot well	● Is the air filter blocked with dust? ● Does sunlight fall directly on the outdoor unit? ● Is the air flow of the outdoor unit obstructed? ● Are the doors or windows opened, or is there any source of heat in the room? ● Is the set temperature suitable? ● Are the air inlets or air outlets of indoor and outdoor units blocked? ● Is the fan speed “LOW” or “SILENT”?

Notes

- In quiet operation or stopping the operation, the following phenomena may occassionally occur, but they are not abnormal for the operation.
  (1) Slight flowing noise of refrigerant in the refrigerating cycle.
  (2) Slight rubbing noise from the fan casing which is cooled and then gradually warmed as operation stops.
- The odor will possibly be emitted from the room air conditioner because the various odor, emitted by smoke, foodstuffs, cosmetics and so on, sticks to it. So the air filter and the evaporator regularly must be cleaned to reduce the odor.

- Please contact your sales agent immediately if the air conditioner still fails to operate normally after the above inspections. Inform your agent of the model of your unit, production number, date of installation. Please also inform him regarding the fault.

- Power supply shall be connected at the rated voltage, otherwise the unit will be broken or could not reach the specified capacity.

NOTE:

- If the supply cord is damaged, it must be replaced by the special cord obtainable at authorized service parts centers.
- On switching on the equipment, particularly when the room light is dimmed, a slight brightness fluctuation may occur. This is of no consequence.
  The conditions of the local Power Supply Companies are to be observed.

Все каталоги и инструкции здесь: https://splitsystema48.ru/instrukcii-po-ekspluatacii-kondicionerov.html

CONSTRUCTION AND DIMENSIONAL DIAGRAM

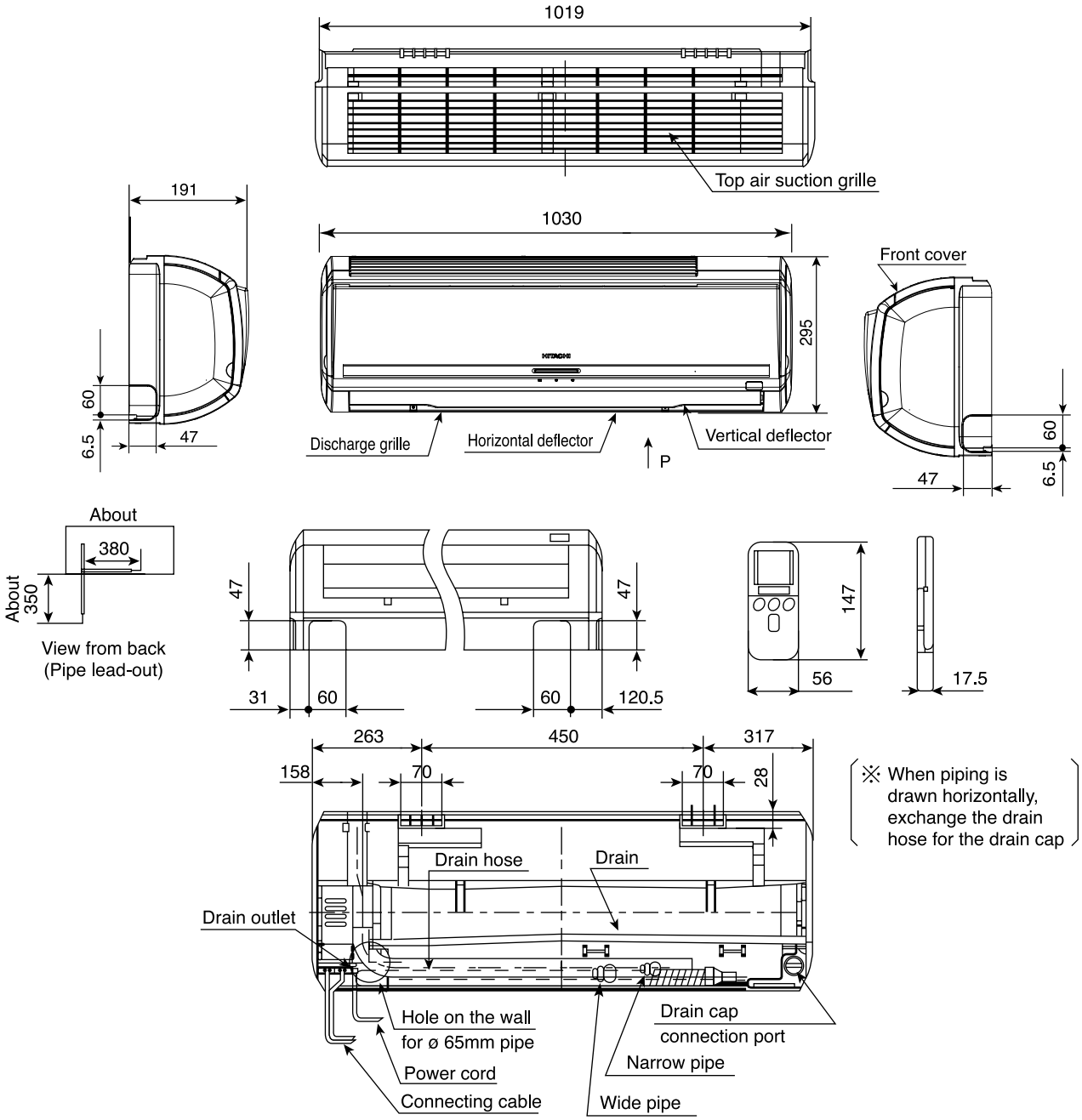

Все каталоги и инструкции здесь: https://splitsystema48.ru/instrukcii-po-ekspluatacii-kondicionerov.html

CONSTRUCTION AND DIMENSIONAL DIAGRAM FOR OUTDOOR

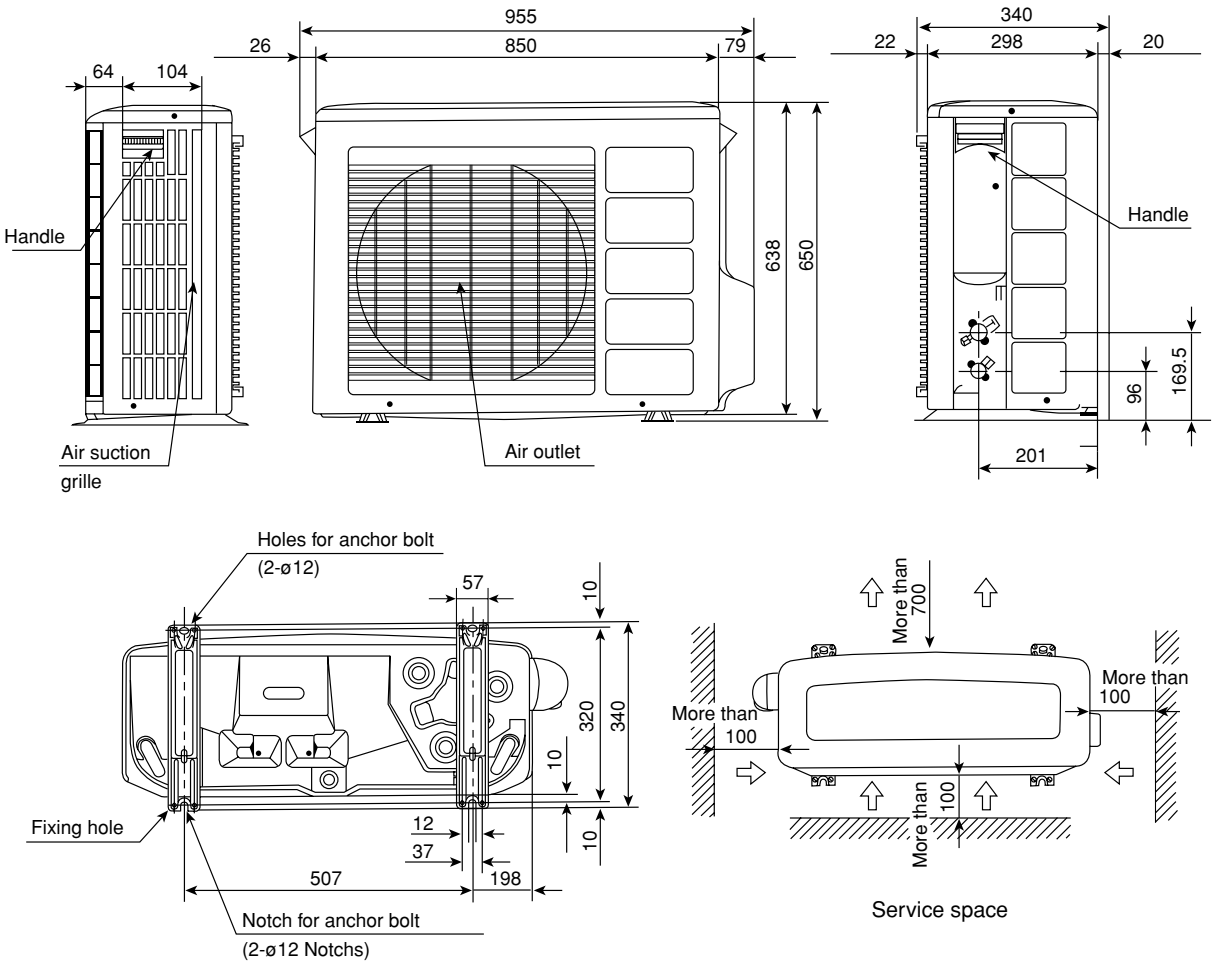

Все каталоги и инструкции здесь: https://splitsystema48.ru/instrukcii-po-ekspluatacii-kondicionerov.html

MAIN PARTS COMPONENT

THERMOSTAT

Thermostat Specifications

MODEL			RAK-65NH5A/RAC-65NH5	
THERMOSTAT MODEL			IC	
OPERATION MODE			COOL	HEAT
TEMPERATURE °C (°F)	INDICATION 16	ON	15.6 (60.1)	20.0 (68.0)
		OFF	15.3 (59.5)	20.7 (69.3)
	INDICATION 24	ON	23.6 (74.5)	28.0 (82.4)
		OFF	23.3 (73.9)	28.7 83.7)
	INDICATION 32	ON	31.6 (88.9)	36.0 (96.8)
		OFF	31.3 (88.3)	36.7 (98.1)

FAN MOTOR

Fan Motor Specifications

MODEL	RAK-65NH5A	RAC-65NH5
POWER SOURCE	DC: 0 ~ 35V	DC360V
OUTPUT	23W	40W
CONNECTION	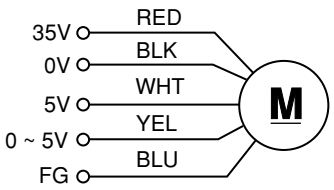 (Control circuit built in)	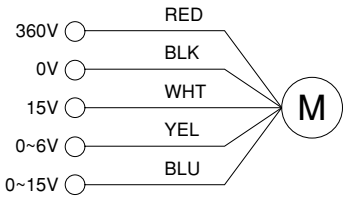

BLU : BLUE	YEL : YELLOW	BRN : BROWN	WHT : WHITE
GRY : GRAY	ORN : ORANGE	GRN : GREEN	RED : RED
BLK : BLACK	PNK : PINK	VIO : VIOLET	

Все каталоги и инструкции здесь: https://splitsystema48.ru/instrukcii-po-ekspluatacii-kondicionerov.html

COMPRESSOR MOTOR

Compressor Motor Specifications

MODEL		RAC-65NH5
COMPRESSOR MODEL		JU1013D5
PHASE		SINGLE
RATED VOLTAGE		AC 220 ~ 240 V
RATED FREQUENCY		50 Hz
POLE NUMBER		4
CONNECTION		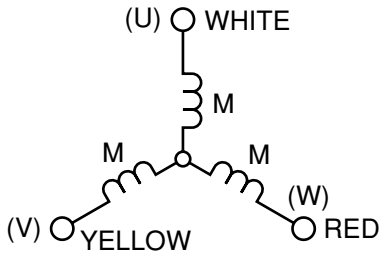
RESISTANCE VALUE (Ω)	20°C (68°F)	2M = 1.05
	75°C (167°F)	2M = 1.28

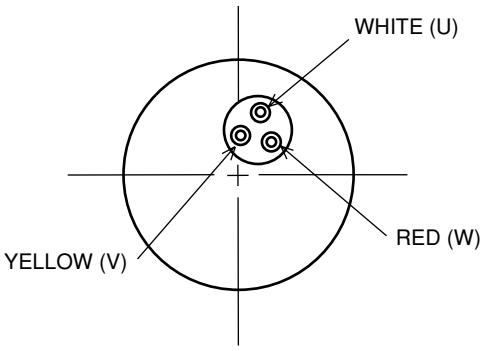

⚠CAUTION

When the refrigerating cycle has been operated for a long time with the capillary tubes clogged or crushed or with too little refrigerant, check the color of the refrigerating machine oil inside the compressor. If the color has been changed conspicuously, replace the compressor.

Все каталоги и инструкции здесь: https://splitsystema48.ru/instrukcii-po-ekspluatacii-kondicionerov.html

WIRING DIAGRAM

MODEL RAK-65NH5A / RAC-65NH5

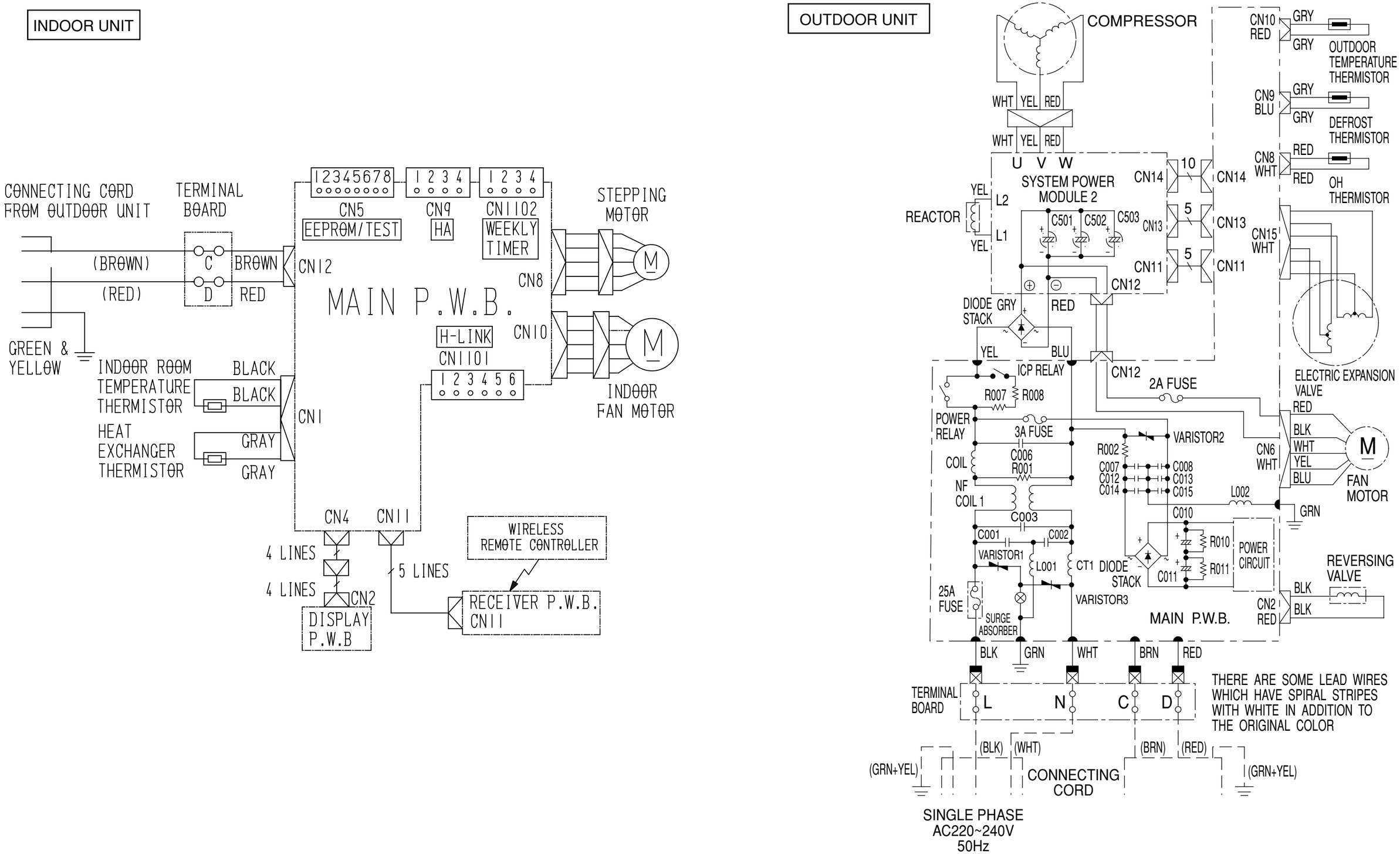

Все каталоги и инструкции здесь: https://splitsystema48.ru/instrukcii-po-ekspluatacii-kondicionerov.html

CIRCUIT DIAGRAM

Remote Control

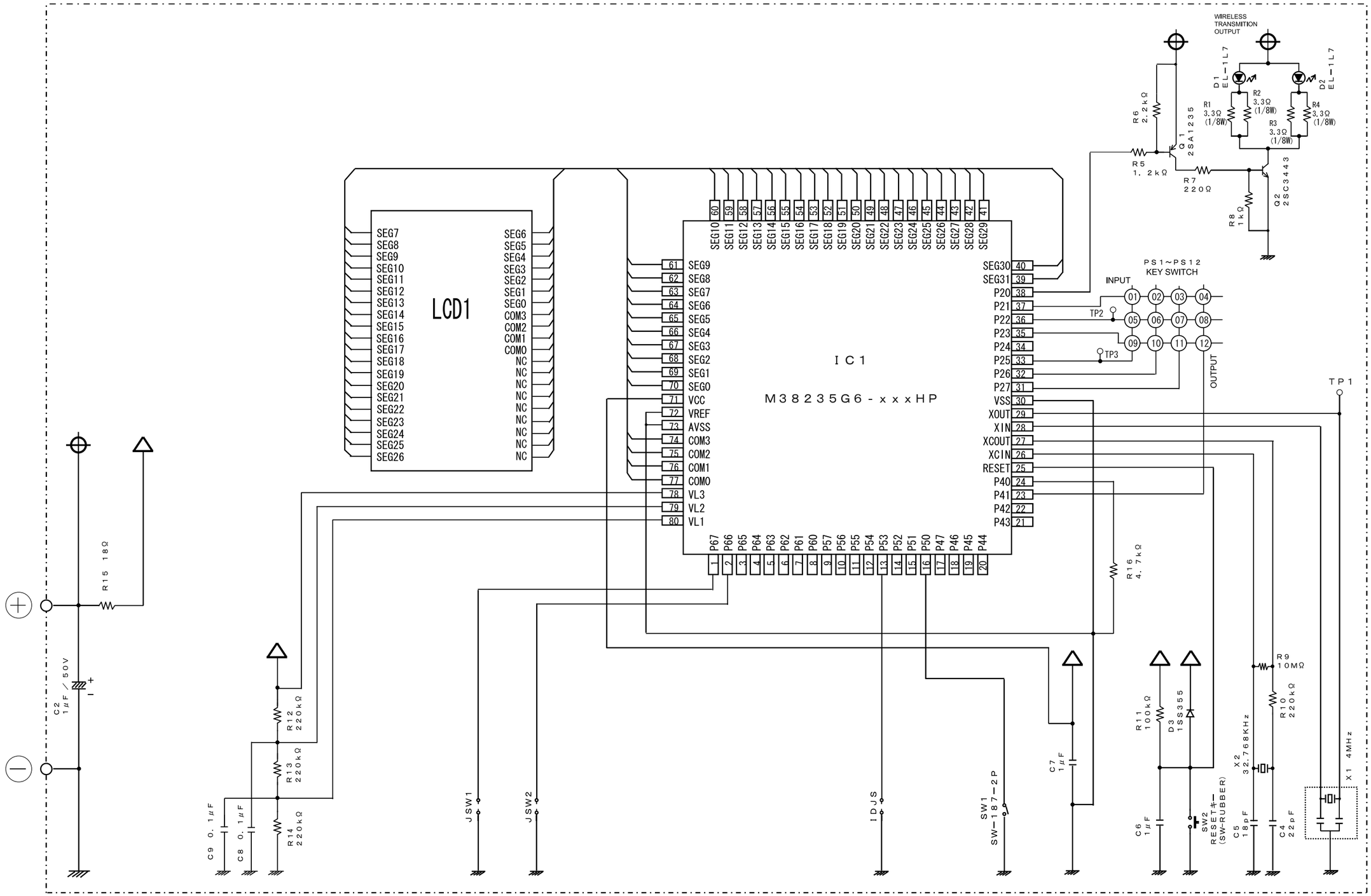

Все каталоги и инструкции здесь: https://splitsystema48.ru/instrukcii-po-ekspluatacii-kondicionerov.html

CIRCUIT DIAGRAM

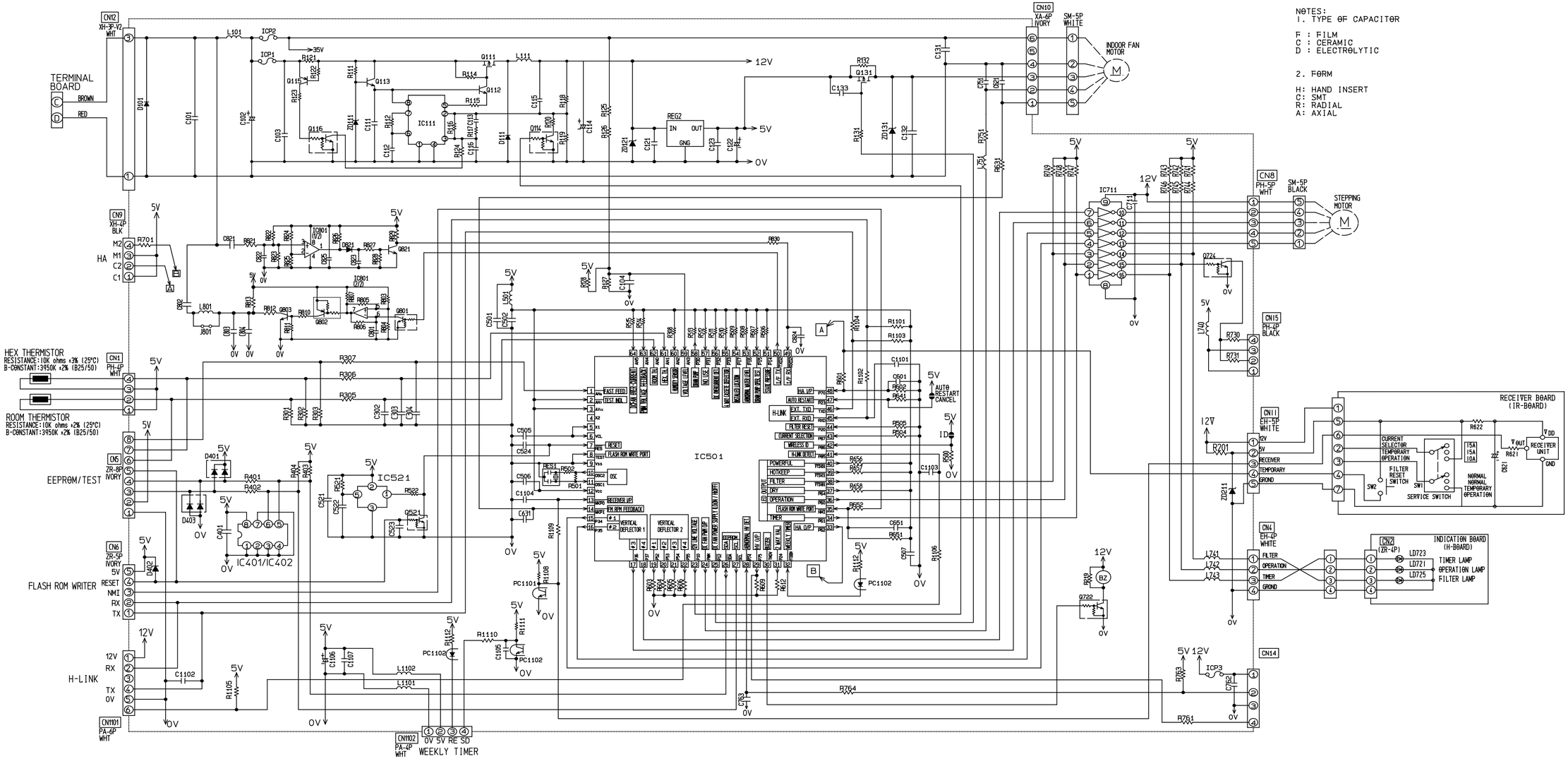

RESISTOR

SYMBOL	RESISTANCE	TOL.	POWER	FORM
R111	27K	±5%	1/10W	C
R112	30K	±5%	1/16W	C
R114	750	±5%	1/8W	C
R115	560	±5%	1/8W	C
R116				
R117	68K	±5%	1/16W	C
R118	75K	±2%	1/16W	C
R119	6.98K	±2%	1/16W	C
R120				
R121	0.56	±5%	1/4W	C
R122	100	±5%	1/16W	C
R123	33K	±5%	1/16W	C
R124	100	±5%	1/16W	C
R125				
R126				
R127				
R128	10K	±5%	1/16W	C
R131				
R132	JUMPER	–	1/16W	C
R201	1K	±5%	1/10W	C
				C
R219	3.3K	±5%	1/10W	C
R301	12.7K	±1%	1/16W	C
R302	12.7K	±1%	1/16W	C
R303	10K	±5%	1/16W	C
R305	1K	±5%	1/16W	C
R306	1K	±5%	1/16W	C
R307	1K	±5%	1/16W	C
R308	10K	±5%	1/16W	C

SYMBOL	RESISTANCE	TOL.	POWER	FORM
R401	390	±5%	1/16W	C
R402	390	±5%	1/16W	C
R403	5.1K	±5%	1/16W	C
R404	5.1K	±5%	1/16W	C
R500	10K	±5%	1/16W	C
R501	1M	±5%	1/16W	C
R502	0	±5%	1/16W	C
R504	10K	±5%	1/16W	C
R505	10K	±5%	1/16W	C
R506	10K	±5%	1/16W	C
R507	10K	±5%	1/16W	C
R508	10K	±5%	1/16W	C
R509	10K	±5%	1/16W	C
R510	10K	±5%	1/16W	C
R511	10K	±5%	1/16W	C
R512	10K	±5%	1/16W	C
R513	10K	±5%	1/16W	C
R514	10K	±5%	1/16W	C
R515	10K	±5%	1/16W	C
R521	1M	±5%	1/16W	C
R522	1K	±5%	1/16W	C
R601	1K	±5%	1/16W	C
R602	10K	±5%	1/16W	C
R603	10K	±5%	1/16W	C
R604	10K	±5%	1/16W	C
R605	10K	±5%	1/16W	C
R606	10K	±5%	1/16W	C
R609				
R612	10K	±5%	1/16W	C

SYMBOL	RESISTANCE	TOL.	POWER	FORM
R621	10K	±5%	1/6W	A
R622	10K	±5%	1/6W	A
R631	1K	±5%	1/16W	C
R641	10K	±5%	1/16W	C
R651	1K	±5%	1/16W	C
R652	100	±5%	1/16W	C
R656	10K	±5%	1/16W	C
R657	10K	±5%	1/16W	C
R658	10K	±5%	1/16W	C
R701	1K	±5%	1/16W	C
R701	390	±5%	1/4W	C
R701	390	±5%	1/4W	C
R741	110	±5%	1/10W	C
R742	110	±5%	1/10W	C
R743	110	±5%	1/10W	C
R744	130	±5%	1/10W	C
R745	130	±5%	1/10W	C
R746	130	±5%	1/10W	C
R747	5.1K	±5%	1/16W	C
R748				
R749	5.1K	±5%	1/16W	C
R751	2.7K	±5%	1/16W	C
R751	100	±5%	1/16W	C
R763	10K	±5%	1/16W	C
R764	1K	±5%	1/16W	C

SYMBOL	RESISTANCE	TOL.	POWER	FORM
R803	120K	±5%	1/16W	C
R804	120K	±5%	1/16W	C
R805	120K	±5%	1/16W	C
R806	120K	±5%	1/16W	C
R807	4.3K	±5%	1/16W	C
R810	680	±5%	1/10W	C
R811	2K	±5%	1/16W	C
R812	39	±5%	1/8W	C
R813	39	±5%	1/8W	C
R821	1K	±5%	1/16W	C
R822	10K	±1%	1/16W	C
R823	10K	±1%	1/16W	C
R824	8.25K	±1%	1/16W	C
R825	10K	±1%	1/16W	C
R826	1K	±5%	1/16W	C
R827	3K	±5%	1/16W	C
R828	10K	±5%	1/16W	C
R829	5.1K	±5%	1/16W	C
R830	1K	±5%	1/16W	C
R1101	10K	±5%	1/10W	C
R1102	1K	±5%	1/10W	C
R1103	10K	±5%	1/10W	C
R1104	1K	±5%	1/10W	C
R1105	10K	±5%	1/16W	C
R1106	1K	±5%	1/6W	A
R1107	150	±5%	1/4W	C
R1108	2K	±5%	1/10W	C
R1109	1K	±5%	1/10W	C
R1110	150	±5%	1/4W	C
R1111	2K	±5%	1/10W	C
R1112	560	±5%	1/10W	C

CAPACITOR

SYMBOL	CAPACITANCE	VOL.	TYPE	FORM
C101	0.22μ	50V	F	H
C102	330μ	63V	D(FF)	H
C103	470P	630V	C	C
C104				
C111	2.2μ	10V	C(FB)	C
C112	1000P	50V	C(FB)	C
C113	0.047μ	25V	C(FB)	C
C114	220μ	35V	D(FF)	H
C115				
C116				
C121	0.1μ	25V	C(FB)	C
C122	100μ	10V	D(FF)	H
C123	0.1μ	25V	C(FB)	C
C131	0.22μ	50V	C(FB)	C
C132	0.1μ	25V	C(FB)	C
C133				
C302	0.1μ	25V	C(FB)	C
C303	0.1μ	25V	C(FB)	C
C304	0.1μ	25V	C(FB)	C
C401	0.1μ	25V	C(FB)	C
C501	0.1μ	25V	C(FB)	C
C502	0.1μ	25V	C(FB)	C
C505	0.1μ	25V	C(FB)	C
C506	0.1μ	25V	C(FB)	C
C507	0.1μ	25V	C(FB)	C
C521	0.1μ	25V	C(FB)	C
C522	0.22μ	10V	C(FB)	C
C523	0.1μ	25V	C(FB)	C
C524	0.1μ	25V	C(FB)	C

SYMBOL	CAPACITANCE	VOL.	TYPE	FORM
C601	0.1μ	25V	C(FB)	C
C621				
C631	1000P	50V	C(FB)	C
C651	0.1μ	25V	C(FB)	C
C711	0.1μ	25V	C(FB)	C
C751	1μ	16V	C(FB)	C
C762				
C763	0.1μ	25V	C(FB)	C
C801	150P	50V	C(FB)	C
C802	0.22μ	50V	F	H
C803	0.1μ	25V	C(FB)	C
C804				
C821	0.01μ	50V	F	H
C822	1000P	50V	C(FB)	C
C823	0.047μ	25V	C(FB)	C
C824	0.01μ	50V	C(FB)	C
C825	0.1μ	25V	C(FB)	C
C1101	1000P	50V	C(FB)	C
C1102	1000P	50V	C(FB)	C
C1103	0.1μ	25V	C(FB)	C
C1104	1000P	50V	C(FB)	C
C1105	1000P	50V	C(FB)	C
C1106	47μ	25V	D(FB)	H
C1107	0.1μ	25V	C(FB)	C
C621	47μ	16V	D(FB)	H

TRANSISTOR

SYMBOL	MODEL	FORM
Q111	2SJ518	C
Q112	2SC5209H	C
Q113	2SC5209H	C
Q114		
Q115	2SA1162Y	C
Q116	RN1102	C
Q131		
Q521	RN1102	C
Q722	RN1102	C
Q724	RN1102	C
Q801	RN1102	C
Q802	RN2102	C
Q803	2SC3441E	C
Q821	2SC4738GRY	C

INDUCTOR

SYMBOL	INDUCTANCE	C. RATING	FORM
L101	82μ	1.3A	H
L111	560μ	0.4A	H
L501	CHIP JUMPER	–	C
L741	CHIP JUMPER	–	C
L742	CHIP JUMPER	–	C
L743	CHIP JUMPER	–	C
L751	CHIP JUMPER	–	C
L801	100μ	55mA	C
L1101	EXCELSA35	–	C
L1102	EXCELSA35	–	C

LED

SYMBOL	MODEL	COLOR	FORM	
LD721	SEL6914A	YEL	H	LED BOARD
LD723	SEL6214S	RED	H	LED BOARD
LD725	SEL6414E	GRN	H	LED BOARD

ICPS

SYMBOL	MODEL	COLOR	FORM
ICP1	CCP2E-20	0.8A	C
ICP2	CCP2E-50	2.0A	C
ICP3			

OSCILLATOR

SYMBOL	MODEL	FREQ.	FORM
RES1	CSTLS10MHZ	10MHz	H

ZENER DIODE

SYMBOL	MODEL	FORM
ZD111	RD6.2UJN2	C
ZD121	PTZ20A	C
ZD131	BLZ6.8A	C
ZD211	RD5.1UJN2	C

BUZZER

SYMBOL	MODEL	FORM
BZ	PKM13EPY	H

CHIP JUMPER

SYMBOL	USAGE	FORM
J801	NONE	C

PHOTO COUPLER

SYMBOL	MODEL	FORM
PC1101	TLP421BL	C
PC1102	TLP421BL	C

SWITCH

SYMBOL	MODEL	FORM	
SW2	EVOPAC 09K	H	IR BOARD

IC

SYMBOL	MODEL	FORM	
IC111	NJM2340M	C	
REG2	MC7805CT	H	
IC401	BR24C02F	C	
IC402	S24C01BDP	H	
IC501	AK-7X20	C	
IC521	RN5VD42C	C	
IC711	ULN2003ANS	C	
IC801	NJM2903M	C	
RECEIVER	SBX8035-F	H	IR BOARD

DIODE

SYMBOL	MODEL	FORM
D101	G4DL-6140	H
D111	D1FS6	C
D401		
D403		
D402	1SS355	C
D821	1SS355	C

CONNECTORS

SYMBOL	MODEL NO.	COLOR	FORM	REMARK
CN1	PH-4P (TOP ENTRY)	WHITE	H	ROOM/HEAT EXHG THERMISTOR
CN2	ZR-4P (TOP ENTRY)	IVORY	H	LED BOARD
CN4	EH-4P (TOP ENTRY)	WHITE	H	LED BOARD (MAIN BOARD)
CN5	ZR-8P (SIDE ENTRY)	IVORY	H	EEPROM / TEST
CN6	ZR-5P (TOP ENTRY)	IVORY	H	FLASH ROM
CN8	PH-5P (TOP ENTRY)	WHITE	H	STEPPING MOTOR
CN9	XH-4P (TOP ENTRY)	BLACK	H	HA
CN10	XA-6P (TOP ENTRY)	IVORY	H	INDOOR PWM FAN
CN11	ZR-7P (TOP ENTRY)	IVORY	H	IR BOARD
CN11	EH-5P (TOP ENTRY)	WHITE	H	IR BOARD (MAIN BOARD)
CN12	XH-3P-V2 (TOP ENTRY)	WHITE	H	35V SUPPLY
CN14				
CN15	PH-4P (TOP ENTRY)	BLACK	H	UV-LED UNIT
CN1101	PA-6P (TOP ENTRY)	WHITE	H	H-LINK
CN1102	PA-4P (TOP ENTRY)	WHITE	H	WEEKLY TIMER

Все каталоги и инструкции здесь: https://spiltsystema48.ru/instrukcii-po-ekspluatacii-kondicionerov.html

CIRCUIT DIAGRAM

MODEL RAC-65NH5

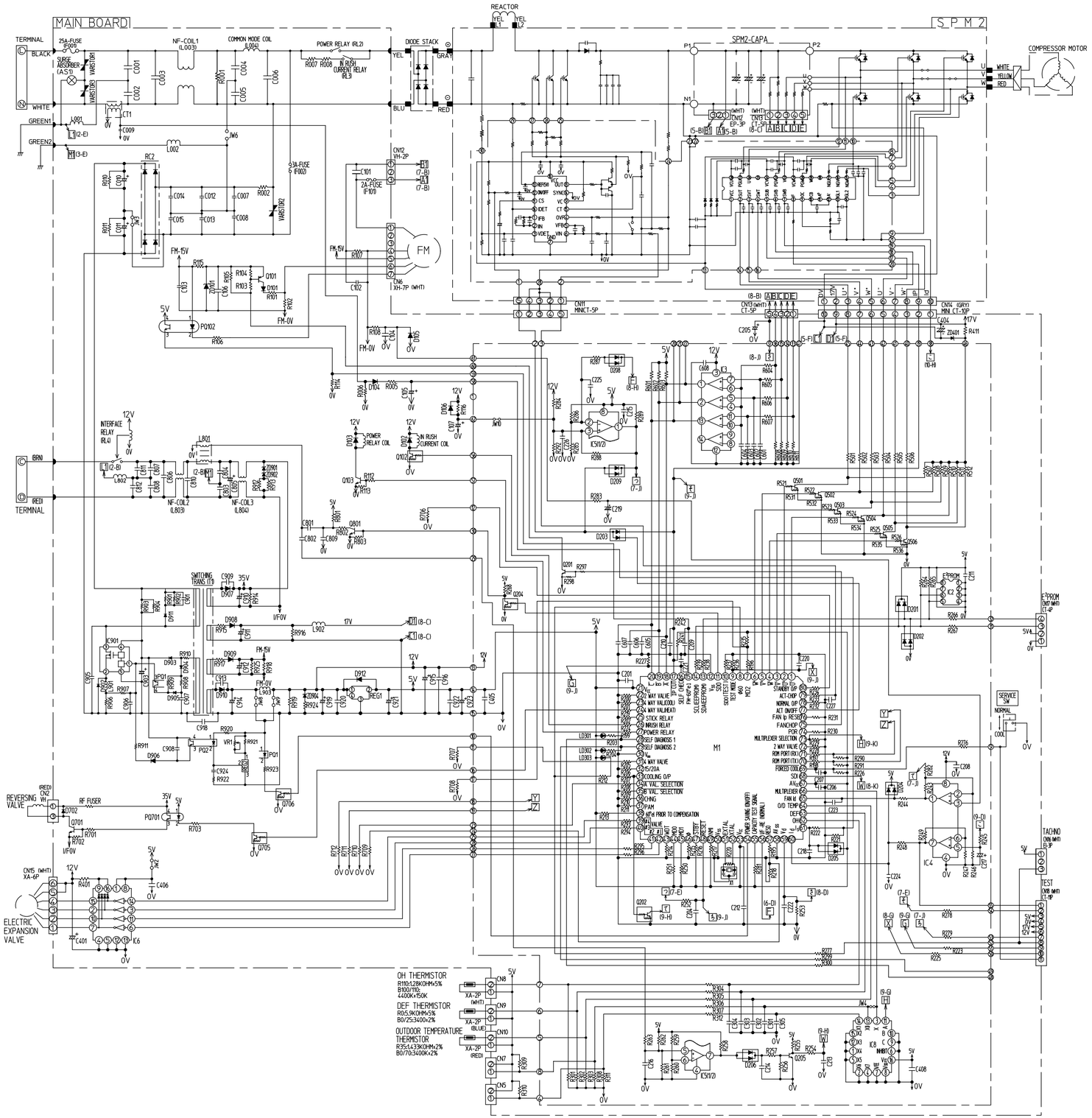

MOUNTING

A: AXIAL
R: RADIAL (R1,R2)
P: RADIAL (7.5MM PITCH)
H: MANUAL INSERT

COMPONENT TYPE

C: CERAMIC
F: FILM
D: ELECTROLYTIC

BOARD

HIC: HYBRID IC
M: MAIN BOARD

RESISTORS

MARK	RATING (R)	(%)	(W)	MOUNTING	BOARD	REMARK
R001	470K	5%	1/2	A	M	
R002	2.2	5%	5	H	M	CEMENT
R005	1.69K	1%	1/4	A	M	
R006	1K	1%	1/4	A	M	
R007	100	5%	10	H	M	CEMENT
R008	100	5%	10	H	M	CEMENT
R010	470K	5%	1/2	A	M	
R011	470K	5%	1/2	A	M	
R101	3.6K	1%	1/4	A	M	
R102	3K	1%	1/4	A	M	
R103	36K	5%	1/4	A	M	
R104	3.9K	5%	1/4	A	M	
R105	7.5K	5%	1/4	A	M	
R106	2.4K	5%	1/4	A	M	
R107	1	1%	2	P	M	
R108	510	5%	1/4	A	M	
R112	10K	5%	1/4	A	M	
R113	7.5K	5%	1/4	A	M	
R114	1K	5%	1/4	A	M	
R115	JUMPER			A	M	
R116				A	M	
R195	1K	5%	1/16	C	HIC	1608
R196	1K	5%	1/16	C	HIC	1608
R197	1K	5%	1/16	C	HIC	1608
R198	1K	5%	1/16	C	HIC	1608
R199	1K	5%	1/16	C	HIC	1608
R200	10K	5%	1/16	C	HIC	1608
R201	10K	5%	1/16	C	HIC	1608
R202	10K	5%	1/16	C	HIC	1608
R203	390	5%	1/16	C	HIC	1608
R204	390	5%	1/16	C	HIC	1608
R205	1K	5%	1/16	C	HIC	1608
R206	10K	5%	1/16	C	HIC	1608
R207	10K	5%	1/16	C	HIC	1608
R208	1K	5%	1/16	C	HIC	1608
R209	10K	5%	1/16	C	HIC	1608
R210	10K	5%	1/16	C	HIC	1608
R211	10K	5%	1/16	C	HIC	1608
R212	390	5%	1/16	C	HIC	1608
R213	10K	5%	1/16	C	HIC	1608
R214	10K	5%	1/16	C	HIC	1608
R215	10K	5%	1/16	C	HIC	1608
R216	10K	5%	1/16	C	HIC	1608
R217	10K	5%	1/16	C	HIC	1608
R218	10K	5%	1/16	C	HIC	1608
R219	1K	5%	1/16	C	HIC	1608
R220	1M	5%	1/16	C	HIC	1608
R221	10K	1%	1/16	C	HIC	1608
R222	510	5%	1/16	C	HIC	1608
R223	1K	5%	1/16	C	HIC	1608
R224	1K	5%	1/16	C	HIC	1608
R225	1K	5%	1/16	C	HIC	1608
R226	10K	5%	1/16	C	HIC	1608
R227	10K	5%	1/16	C	HIC	1608
R228	10K	5%	1/16	C	HIC	1608
R229	10K	5%	1/16	C	HIC	1608
R230	10K	5%	1/16	C	HIC	1608
R231	10K	5%	1/16	C	HIC	1608
R232	10K	5%	1/16	C	HIC	1608
R233	100	5%	1/16	C	HIC	1608
R234	1K	5%	1/16	C	HIC	1608
R235	10K	5%	1/16	C	HIC	1608
R236	10K	5%	1/16	C	HIC	1608
R237	10K	5%	1/16	C	HIC	1608
R238	100	5%	1/16	C	HIC	1608
R239	100	5%	1/16	C	HIC	1608
R241	5.6K	5%	1/16	C	HIC	1608
R242	1K	5%	1/16	C	HIC	1608
R243	2K	1%	1/16	C	HIC	1608
R244	2K	5%	1/16	C	HIC	1608
R245	10K	5%	1/16	C	HIC	1608
R246	1K	1%	1/16	C	HIC	1608
R247	3.16K	1%	1/16	C	HIC	1608
R248	2K	5%	1/16	C	HIC	1608
R249	20K	1%	1/16	C	HIC	1608
R250	10K	5%	1/16	C	HIC	1608
R251	10K	5%	1/16	C	HIC	1608
R252	5.1K	5%	1/16	C	HIC	1608
R253	3.32K	1%	1/16	C	HIC	1608
R254	100	5%	1/16	C	HIC	1608
R255	2K	5%	1/16	C	HIC	1608
R256	10K	5%	1/16	C	HIC	1608
R257	3K	5%	1/16	C	HIC	1608
R258	1K	5%	1/16	C	HIC	1608
R259	8.25K	1%	1/16	C	HIC	1608
R260	10K	1%	1/16	C	HIC	1608
R261	10K	1%	1/16	C	HIC	1608
R262	10K	1%	1/16	C	HIC	1608
R263	1K	5%	1/16	C	HIC	1608
R264	5.1K	5%	1/16	C	HIC	1608
R265	5.1K	5%	1/16	C	HIC	1608
R266	390	5%	1/16	C	HIC	1608
R267	390	5%	1/16	C	HIC	1608
R268	2K	5%	1/10	C	HIC	2125
R276	100	5%	1/16	C	HIC	1608
R277	100	5%	1/16	C	HIC	1608
R278	100	5%	1/16	C	HIC	1608
R279	100	5%	1/16	C	HIC	1608
R281	10K	5%	1/16	C	HIC	1608
R282		5%	1/16	C	HIC	1608
R283	1K	5%	1/16	C	HIC	1608
R284	10K	2%	1/16	C	HIC	1608
R285	4.7K	2%	1/16	C	HIC	1608
R286	5.1K	2%	1/16	C	HIC	1608
R287		5%	1/16	C	HIC	1608
R288	51K	5%	1/16	C	HIC	1608
R289	5.1K	5%	1/16	C	HIC	1608
R290	10K	5%	1/16	C	HIC	1608
R291	10K	5%	1/16	C	HIC	1608
R292	3K	2%	1/16	C	HIC	1608
R293	100	5%	1/16	C	HIC	1608
R294	100	5%	1/16	C	HIC	1608
R295	100	5%	1/16	C	HIC	1608
R296	100	5%	1/16	C	HIC	1608
R297	10K	5%	1/16	C	HIC	1608
R298	5.1K	5%	1/16	C	HIC	1608
R299	100	5%	1/16	C	HIC	1608
R300	100	5%	1/16	C	HIC	1608
R301	3.74K	1%	1/16	C	HIC	1608
R302	3.01K	1%	1/16	C	HIC	1608
R303	3.01K	1%	1/16	C	HIC	1608
R304	100	5%	1/16	C	HIC	1608
R305	100	5%	1/16	C	HIC	1608
R306	100	5%	1/16	C	HIC	1608
R307	100	5%	1/16	C	HIC	1608

RESISTORS

MARK	RATING (R)	(%)	(W)	MOUNTING	BOARD	REMARK
R308	3.09K	1%	1/16	C	HIC	1608
R309	5.1K	5%	1/4	A	M	
R310	5.1K	5%	1/4	A	M	
R311	10K	1%	1/16	C	HIC	1608
R312	100	5%	1/16	C	HIC	1608
R401	100	5%	1/4	A	M	
R411	JUMPER					
R501	1K	5%	1/16	C	HIC	1608
R502	1K	5%	1/16	C	HIC	1608
R503	1K	5%	1/16	C	HIC	1608
R504	1K	5%	1/16	C	HIC	1608
R505	1K	5%	1/16	C	HIC	1608
R506	1K	5%	1/16	C	HIC	1608
R507	5.1K	5%	1/8	C	HIC	3216
R508	5.1K	5%	1/8	C	HIC	3216
R509	5.1K	5%	1/8	C	HIC	3216
R510	5.1K	5%	1/8	C	HIC	3216
R511	5.1K	5%	1/8	C	HIC	3216
R512	5.1K	5%	1/8	C	HIC	3216
R521	10K	5%	1/16	C	HIC	1608
R522	10K	5%	1/16	C	HIC	1608
R523	10K	5%	1/16	C	HIC	1608
R524	10K	5%	1/16	C	HIC	1608
R525	10K	5%	1/16	C	HIC	1608
R526	10K	5%	1/16	C	HIC	1608
R531	5.1K	5%	1/16	C	HIC	1608
R532	5.1K	5%	1/16	C	HIC	1608
R533	5.1K	5%	1/16	C	HIC	1608
R534	5.1K	5%	1/16	C	HIC	1608
R535	5.1K	5%	1/16	C	HIC	1608
R536	5.1K	5%	1/16	C	HIC	1608
R601	2K	5%	1/16	C	HIC	1608
R602	2K	5%	1/16	C	HIC	1608
R603	2K	5%	1/16	C	HIC	1608
R604	100	5%	1/16	C	HIC	1608
R605	100	5%	1/16	C	HIC	1608
R606	100	5%	1/16	C	HIC	1608
R607	100	5%	1/16	C	HIC	1608
R608	4.02K	1%	1/16	C	HIC	1608
R609	4.02K	1%	1/16	C	HIC	1608
R610	4.02K	1%	1/16	C	HIC	1608
R611	4.02K	1%	1/16	C	HIC	1608
R701	7.5K	5%	1/2	A	M	
R702	10K	5%	1/4	A	M	
R703	470	5%	1/4	A	M	
R706	10K	5%	1/4	A	M	
R707	10K	5%	1/4	A	M	
R708						
R709						
R710	10K	5%	1/4	A	M	
R711						
R712						
R801	39	5%	1/4	A	M	
R802	39	5%	1/4	A	M	
R803	3K	5%	1/4	A	M	
R901	200K	5%	1/2	A	M	
R902	200K	5%	1/2	A	M	
R903	820K	5%	1/2	A	M	
R904	820K	5%	1/2	A	M	
R906	0.39	5%	2	P	M	
R907	680	5%	1/4	A	M	
R908	2.7K	5%	1/4	A	M	
R909	2.7K	5%	1/4	A	M	
R910	6.2	5%	1/2	A	M	
R911	4.3K	5%	1/4	A	M	
R912	270	5%	2	H	M	
R913						
R914	47K	5%	1/4	A	M	
R915	JUMPER			A	M	
R916	1.5K	5%	1	A	M	
R917	3.3	5%	1	P	M	
R918	1K	5%	1	P	M	
R919	3K	5%	1/4	A	M	
R920	680	5%	1/4	A	M	
R921						
R922	JUMPER			A	M	
R923	1K	5%	1/4	A	M	
R924						
R925						

ICS

MARK	MODEL	MOUNTING	BOARD	REMARK
IC901	STR-F6523	H	M	
REG1	P005R008	H	M	
REG2	SE012N	H	M	
IC2	S24C02BF-J-TB	S	HIC	
IC3	NJM2901M-TE1	S	HIC	
IC4	NJM2904M-TE3	S	HIC	
IC5	NJM2903V-TE1	S	HIC	
IC6	M54567P	H	M	
IC8				
M1	AX-8T	Q	HIC	

SURGE PROTECTORS

MARK	MODEL	MOUNTING	BOARD	REMARK
VARISTOR1	450NR12D	P	M	
VARISTOR2	450NR12D	P	M	
VARISTOR3	450NR12D	P	M	
AS1	RA-102M-C6-Y	H	M	

SWITCH

MARK	MODEL	MOUNTING	BOARD	REMARK
SW1	KSM0612BTS	R	M	

CAPACITORS

MARK	RATING (μF)	(V)	COMPONENT TYPE	MOUNTING	BOARD	REMARK
C001	0.01	250	C	P	M	
C002	0.01	250	C	P	M	
C003	0.68	250 275V	F	H	M	
C004						
C005						
C006	4	400	F	H	M	MITAKI
C007	0.01	250	C	P	M	
C008	0.01	250	C	P	M	
C009	0.1	50	C	R	M	
C010	100	250	D	R	M	
C011	100	250	D	R	M	
C012	0.01	250	C	R	M	
C013	0.01	250	C	R	M	
C014	0.01	250	C	R	M	
C015	0.01	250	C	R	M	
C101	0.082	630	F	H	M	
C102						
C103	0.1	50	C	R	M	
C104	1000P	50	C	R	M	
C105	100	10	D	R	M	VR
C106						
C107	2.2	50	D	R	M	VR
C201	0.047	25	C	C	HIC	1608
C204	0.047	25	C	C	HIC	1608
C205	1	50	D	R	M	VR
C206	0.047	25	C	C	HIC	1608
C207	0.1	25	C	C	HIC	1608
C208	0.047	25	C	C	HIC	1608
C209	0.047	25	C	C	HIC	1608
C210	0.0047	50	C	C	HIC	1608
C211	0.047	25	C	C	HIC	1608
C212	0.047	25	C	C	HIC	1608
C213	0.047	25	C	C	HIC	1608
C214	0.068	16	C	C	HIC	1608
C215	0.047	25	C	C	HIC	1608
C216	0.0047	50	C	C	HIC	1608
C217	22	6.3	D	R	HIC	WX
C218	0.1	16	C	C	HIC	1608
C219	2.2	50	D	C	HIC	WX
C220	0.047	25	C	C	HIC	1608
C221	0.1	25	C	C	HIC	1608
C222	0.1	16	C	C	HIC	1608
C223	0.01	50	C	C	HIC	1608
C224	0.01	50	C	C	HIC	1608
C225	0.01	50	C	C	HIC	1608
C226	0.1	16	C	C	HIC	1608
C227	2200p	50	C	C	HIC	1608
C301	0.1	16	C	C	HIC	1608
C302	0.1	16	C	C	HIC	1608
C303	0.1	16	C	C	HIC	1608
C304	0.1	16	C	C	HIC	1608
C305	0.1	16	C	C	HIC	1608
C401	100	25	D	R	M	VR
C404	100	25	D	R	M	PF
C405	0.1	16	C	C	HIC	1608
C406	0.1	50	C	R	M	
C408	0.1	16	C	C	HIC	1608
C601	0.00068	50	C	C	HIC	1608
C602	0.00068	50	C	C	HIC	1608
C603	0.00068	50	C	C	HIC	1608
C604	0.00068	50	C	C	HIC	1608
C605	0.001	50	C	C	HIC	1608
C606	0.001	50	C	C	HIC	1608
C607	0.001	50	C	C	HIC	1608
C608	0.047	25	C	C	HIC	1608
C801	0.15	50	F	R	M	
C802	0.022	50	F	R	M	
C803	0.01	250	C	P	M	
C804	0.01	250	C	P	M	
C805	68	50	D	R	M	PF
C806	0.15	50	F	R	M	
C807	0.01	250	C	P	M	
C808	0.01	250	C	P	M	
C809	0.15	50	C	R	M	
C810						
C811	0.01	250	C	P	M	(RAC-50NH4 ONLY)
C812	0.01	250	C	P	M	(RAC-50NH4 ONLY)
C901	0.01	1K	C	H	M	
C903	120	25	D	R	M	
C905	1000P	2K	C	P	M	LXV
C906	470p	50	C	R	M	
C907	1800p	50	C	R	M	
C908	0.1	50	C	R	M	
C909						
C910	330	50	D	R	M	LXV
C911	220	25	D	R	M	LXV
C912	330	25	D	R	M	PF
C913						
C914	470	16	D	R	M	PF
C915	120	16	D	R	M	LXV
C916	0.1	50	C	R	M	
C918	0.001	250	C	P	M	
C919						
C920	0.1	50	C	R	M	
C921	180	10	D	R	M	PF
C922	0.1	50	C	R	M	
C923	180	10	D	R	M	PF
C924	0.1	50	C	R	M	

RELAYS

MARK	MODEL	MOUNTING	BOARD	REMARK
POWER RELAY (RL2)	G4A-1A-PE	H	M	
INTERFACE R (RL4)	FTR-F3AA012E	H	M	
IN RUSH C. R. (RL3)	FTR-F3AA012E	H	M	

LEDS

MARK	MODEL	MOUNTING	BOARD	REMARK
LD301	LT1067A	C	HIC	RED
LD302	LT1067A	C	HIC	RED
LD303	LT1067A	C	HIC	RED

ZENER DIODES

MARK	MODEL	MOUNTING	BOARD	REMARK
ZD101				
ZD401				
ZD901	HZ12CPTK	H	M	
ZD902	HZ12CPTK	H	M	
ZD904				

TRANSISTORS

MARK	MODEL	MOUNTING	BOARD	REMARK
Q101	2SA673	R	M	
Q102	DTC114YSATP	R	M	
Q103	2SC3246	R	M	
Q201	2SC2462LC	C	HIC	
Q202				
Q204	RN1402	C	HIC	
Q205	2SC2462LC	C	HIC	
Q501	2SC2462LC	C	HIC	
Q502	2SC2462LC	C	HIC	
Q503	2SC2462LC	C	HIC	
Q504	2SC2462LC	C	HIC	
Q505	2SC2462LC	C	HIC	
Q506	2SC2462LC	C	HIC	
Q701	2SC1214CTZ	R	M	
Q705	DTC114YSATP	R	M	
Q706	DTC114YSATP	R	M	
Q801	2SC1214CTZ	R	M	

CONNECTORS

MARK	MODEL	MOUNTING	BOARD	REMARK
CN2	B2P3-VH-R	H	M	
CN6	B5P-23B-XH-A	H	M	
CN8	B02B-XASK-1N	H	M	
CN9	B02B-XAEK-1	H	M	
CN10	B02B-XARK-1	H	M	
CN11	0-353297-5	H	M	
CN12	B2P3-VH	H	M	
CN13	0-175487-5	H	M	
CN14	1-353297-0	H	M	
CN15	B06B-XASK-1N	H	M	
CN16				
CN17	0-175487-4	H	M	
CN18	1-175487-1	H	M	

PHOTOCOUPLERS

MARK	MODEL	MOUNTING	BOARD	REMARK
PQ1	TLP521-1	H	M	
PQ2	TLP521-1	H	M	
PQ102	TLP521-1	H	M	
PQ701	TLP521-1	H	M	

VARIABLE RESISTOR

MARK	RATING	MOUNTING	BOARD	REMARK
VR1	200Ω,300mV	A	M	

FUSE

MARK	MODEL	MOUNTING	BOARD	REMARK
RF FUSER	JUMPER	A	M	
F001	250VTLNL25A	H	M	250V,25A
F002	N20SL-250-3A	H	M	250V, 3A
F101	N20SL-250-2A	H	M	250V, 2A

COILS

MARK	MODEL	MOUNTING	BOARD	REMARK
L001	FBA04MA450	A	M	
L002	FBA04MA450	A	M	
L003	1015-20132A1	A	M	
L004	1AX03615-03171	H	M	
L801	TD012	H	M	
L802	FBA04MA450	A	M	
L803	CM204	A	M	
L804	CM137	A	M	
L901	BL01RN1	A	M	
L902	JUMPER	A	M	
L903	JUMPER	A	M	
CT1	PCN01906-03561	H	M	
T1	THMA010	H	M	

OSCILLATOR

MARK	MODEL	MOUNTING	BOARD	REMARK
X1	CSTCV4MXX0C3	C	HIC	4MHZ

JUMPERS

MARK	MODEL	MOUNTING	BOARD	REMARK
JW2	EXIST	A	M	
JW3	NONE	A	M	
JW4	CHIP JUMPER	C	HIC	
JW6	NONE	A	M	
JW8	EXIST	A	M	
JW9	NONE	A	M	
JW10	CHIP JUMPER	C	HIC	

DIODES

MARK	MODEL	MOUNTING	BOARD	REMARK
D101	1N4936	A	M	
D102	1N4148	A	M	
D103	1N4148	A	M	
D104	1N4148	A	M	
D105	1N4148	A	M	
D106				
D201	HSM2838CTR	C	HIC	
D202	HSM2836CTL	C	HIC	
D203	HSM2836CTL	C	HIC	
D204	HSM2838CTR	C	HIC	
D205	HSM2838CTR	C	HIC	
D206	HSM2838CTR	C	HIC	
D208	HSM2838CTR	C	HIC	
D209	HSM2838CTR	C	HIC	
D702	1N4148	A	M	
D902	1N4148	A	M	
D903	RMPG06G	A	M	
D904	RMPG06G	A	M	
D905	1N4148	A	M	
D906	1N4148	A	M	
D907	RN37-N	H	M	
D908	1N4936	A	M	
D909	1N4936	A	M	
D910	RK36	A	M	
D911	RU1P	A	M	
D912	1N4148	A	M	
RC2	D3SBA60	H	M	

Все каталоги и инструкции здесь: https://splitsystema48.ru/instrukcii-po-ekspluatacii-kondicionerov.html

PRINTED WIRING BOARD LOCATION DIAGRAM

MAIN P.W.B.

Marking on P.W.B.

COMPONENT SIDE

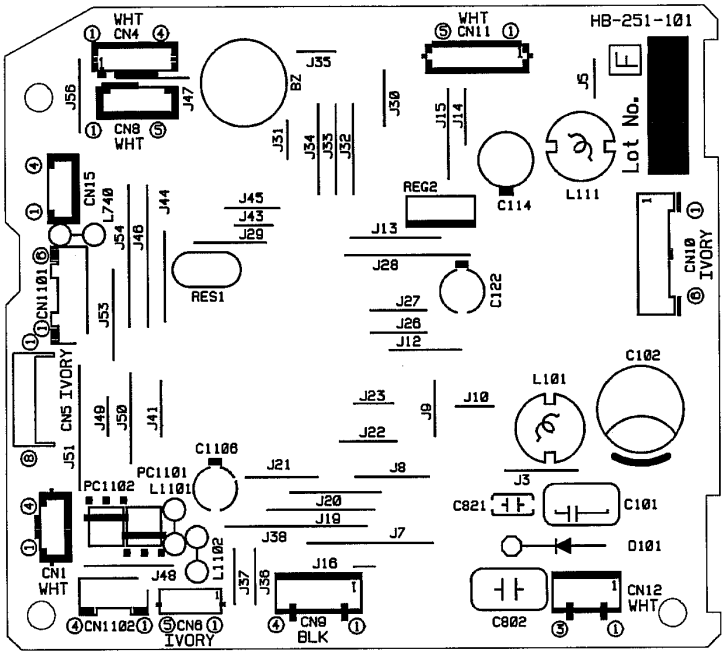

SOLDERING SIDE

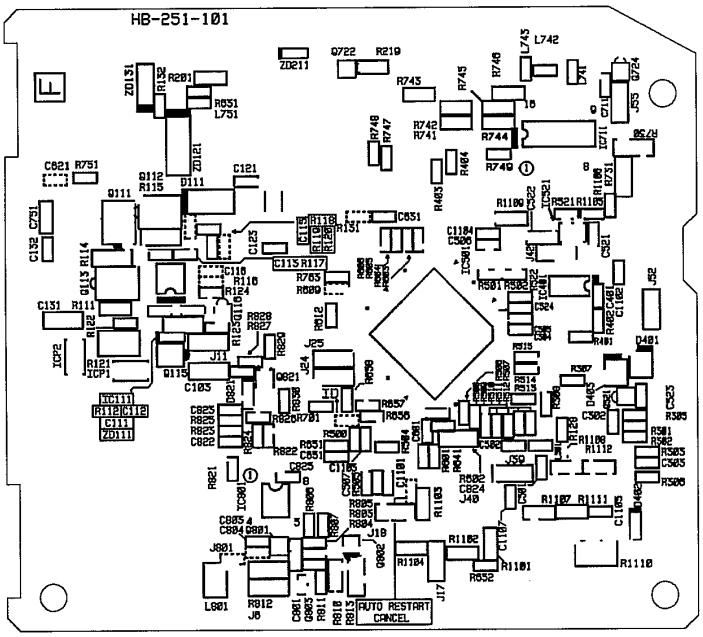

RECEIVING P.W.B.

Marking on P.W.B.

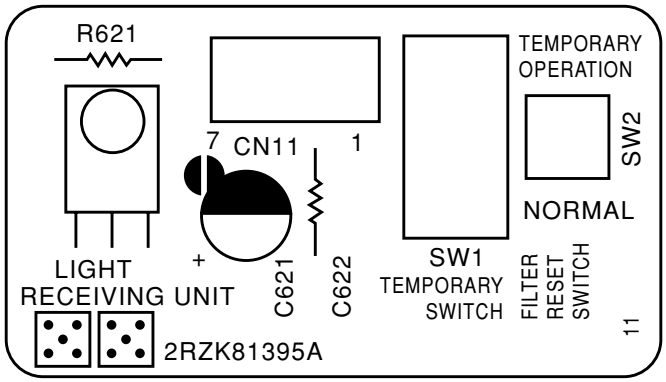

Все каталоги и инструкции здесь: https://splitsystema48.ru/instrukcii-po-ekspluatacii-kondicionerov.html

BLOCK DIAGRAM

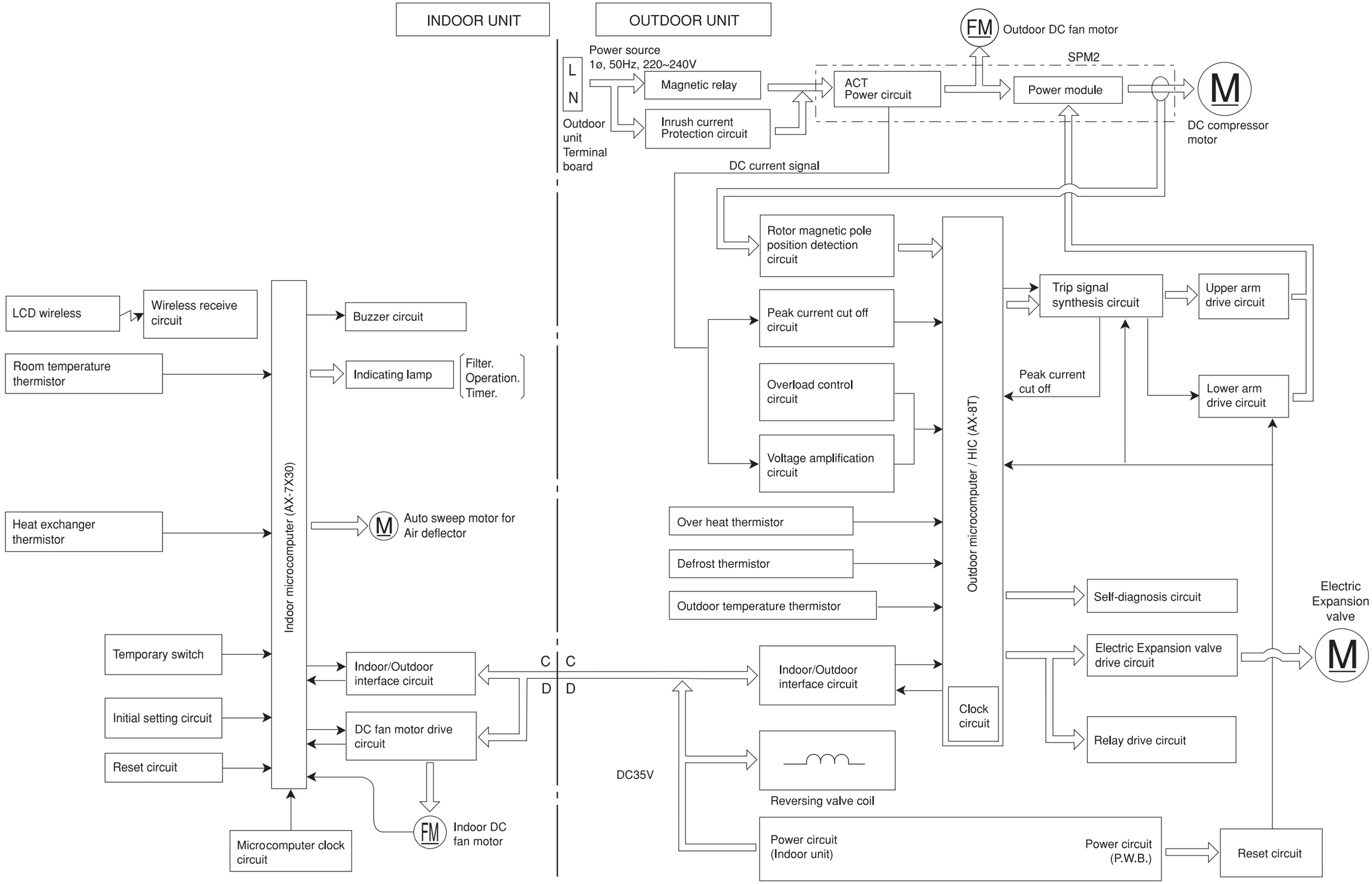

Все каталоги и инструкции здесь: https://splitsystema48.ru/instrukcii-po-ekspluatacii-kondicionerov.html

BASIC MODE

Operation mode		Fan	Cooling	Dehumidifying	Heating	Auto	Special auto mode (not use in normal operation)
Basic operation of start/stop switch		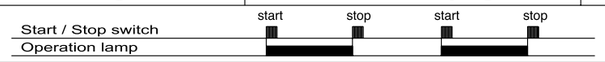					
Timer Function	Off Timer		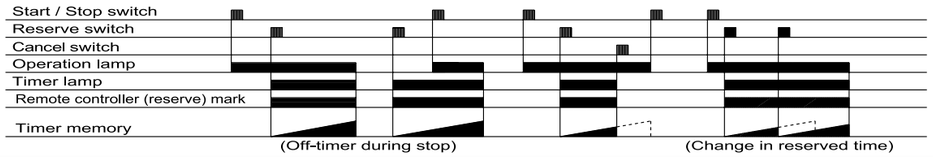				
Timer Function	On Timer		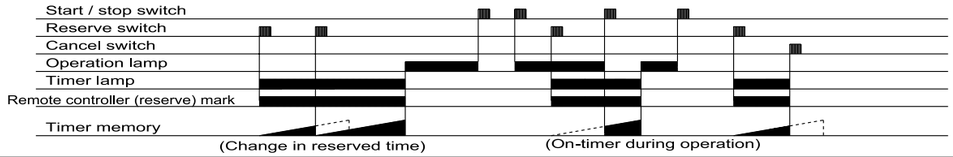				
Timer Function	Off ⇄ On Timer		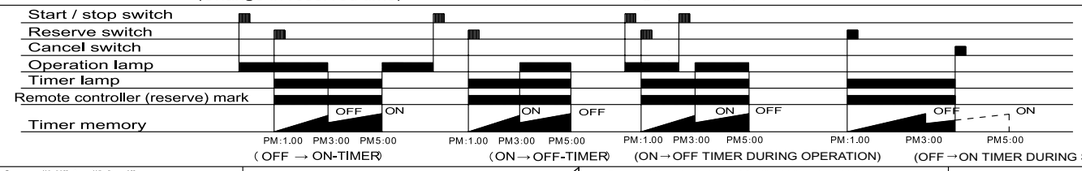				
Fan speed mode (indoor fan)	Auto		Changes from "Hi" to "Med" or "Lo" depending on room temperature. 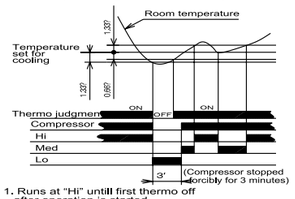 1. Runs at "Hi" untill first thermo off after operation is started. 2. Runs at "Lo" when thermo off. 3. If more than 3 minutes after thermo off (thermo on did not enter the fan shall run at lolo.		Set to "Ultra-Lo","Lo", "Med", "Hi", "Ultra-Hi" or"stop"depending on the room temperature, time and heat exchange temperature. Set to "stop" if the room temperature is <18°C in the "Ultra-Lo" mode other than during preheating (cooling is recovered at 18,33°C) When the compressor is running at maximum speed during hot dash or when recovered from defrosting 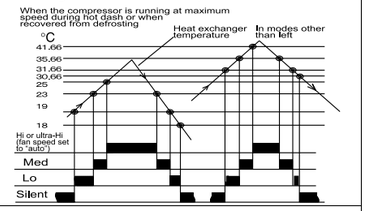	Operating mode Operating mode is judged by room temperature and outdoor temperature 1. Judging by outdoor temperature • Operating mode is judged by outdoor temperature (i) If outdoor temperature ≥ 25°C or 21°C ≤ outdoor temperature < 25°C : restricted to cooling. (ii) If outdoor temperature <18°C or 18°C ≤ outdoor temperature < 21°C : restricted to heating. (iii) If 21°C ≤ outdoor temperature < 25°C or 18°C ≤ outdoor temperature < 21°C : restricted to dehumidifying. 2. Judging by room temperature (a) Condition for judgement (any of followings) • When auto operation is started after 1 hour elapsed since the operation was stopped. • When auto operation is started after the previous manual mode operation. • When the operating mode is switched to auto while operating at manual mode. (b) Operating mode is judged by room temperature. (i) Room temperature > 27°C ± 3°C : cooling. (ii) Room temperature ≤ 23°C ± 3°C : heating. (iii) Room temperature or room temperature > 23°C : dehumidifying. * ±3°C is the shift value, can be set by remote controller. 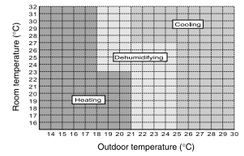 Judging operating mode change during operation (continuous judgement) (a) Condition for judgement (any of followings) • The mode is reviewed at every internal time. • When auto operation is started again before 1 hour has elapsed since the operation was stopped. (b) Judging method • Judge by setting the hysterisis on the final preset temperature, the final preset temperature is the actually targeted preset temperature which is the sum of basic preset temperature and each type of shift value (eg: shift value by remote controller, preset temperature correction value, powerful shift value, etc). [CURRENTLY COOLING] • Room temperature ≤ final preset temperature -3°C change to heating • Room temperature > final preset temperature - 3°C continue to cooling [CURRENTLY HEATING] • Room temperature ≥ final preset temperature +2°C change to cooling. • Room temperature < final preset temperature +2°C continue heating. 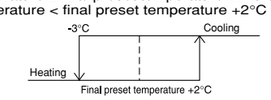	The special auto mode is based on auto, but the following is different: Operation mode: Auto — Mode change during operation: Judging the operation mode from the external temperature and room temperature at the start Operation mode: Special auto — Mode change during operation: The operation mode will be judged the same as at operation start every hour The special auto operation mode is entered when operation is started in the following status: <Start condition> Power is supplied while the tele-control signal is being input. (Operation starts automatically.) <End condition> The remote control restores the normal operation mode.
Fan speed mode (indoor fan)	Hi	Operates at "Hi" regardless of the room temperature.	Set to "Ultra-Hi" when the compressor runs at maximum speed, and to "Hi" in other modes.		Set to "Ultra-Lo", "Lo", "Med", "Hi", "Ultra-Hi"or"stop"depending on the room temperature and time. Set to "Stop" if the room temperature is <18°C in the "Ultra-Lo" mode other than during preheating (cooling is recovered at 18.33°C) Set to "Ultra-Hi" when the compressor is running at maximum speed during hot dash or when recovered from defrosting.		
Fan speed mode (indoor fan)	Med	Operates at "Med" regardless of the room temperature.	Same as at left		Set to "Ultra-Lo","Lo", "Med"or"stop" depending on the room temperature and time. Set to "Stop" if the room temperature is 18°C in the "Ultra-Lo" mode other than during preheating (cooling is recovered at 18.33°C)		
Fan speed mode (indoor fan)	Lo	Operates at "Lo" regardless of the room temperature.	Same as at left	Except when the comp. is stop the fan shall run at [Lo]	Set to "Ultra-Lo","Lo" or "stop" depending on the room temperature and time. Set to "Stop" if the room temperature is 18°C in the "Ultra-Lo" mode other than during preheating (cooling is recovered at 18.33°C) The fan speed is controlled by the heat exchanger temperature; the overload control is executed as in the following diagram: 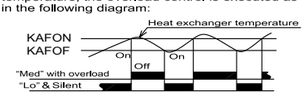		
Fan speed mode (indoor fan)	Silent	Operates at "Silent" regardless of the room temperature.	Same as at left	Except when the comp. is stop the fan shall run at [Silent]			
Basic operation of temperature controller		Performs only fan operation at the set speed regardless of the room temperature. 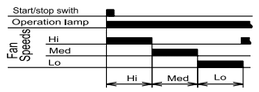	See page basic cooling operation	See page basic dehumidifying operation	See page basic heating operation		
Sleep operation (with sleep button ON)		Enters sleep operation after set as on the left. Action during sleep operation silent (sleep) operation	○ Same as at left. ○ See page cooling sleep operation	○ Same as at left. ○ See page dehumidifying sleep operation	○ Same as at left. ○ See page heating sleep operation	○ Same as at left. ○ Performs the sleep operation of each operation mode.	

Notes:
1. Refer to the PWRITE-ZU data for the constants expressed by capital alphabet letters in the drawing.

Все каталоги и инструкции здесь: https://splitsystema48.ru/instrukcii-po-ekspluatacii-kondicionerov.html

Table 1 Mode data file

	RAK-65NH5A
LABEL NAME	**VALUE**
WMAX	6300 min^{-1}
WMAX2	6300 min^{-1}
WSTD	5900 min^{-1}
WJKMAX	4350 min^{-1}
WBEMAX	3600 min^{-1}
WSZMAX	3600 min^{-1}
CMAX	6300 min^{-1}
CSTD	5850 min^{-1}
CJKMAX	3700 min^{-1}
CBEMAX	3000 min^{-1}
CSZMAX	3000 min^{-1}
WMIN	1200 min^{-1}
CMIN	1500 min^{-1}
STARTMC	60 Seconds
DWNRATEW	80%
DWNRATEC	80%
SHIFTW	0°C
SHIFTC	0.33°C
CLMXTP	30.00°C
YNEOF	25.00°C
TEION	2.00°C
TEIOF	9.00°C
SFTDSW	1.00°C
DFTIM1	50 Minutes
DFTIM2	50 Minutes
KAFON	53°C
KAFOF	47°C

Все каталоги и инструкции здесь: https://splitsystema48.ru/instrukcii-po-ekspluatacii-kondicionerov.html

Basic Cooling Operation

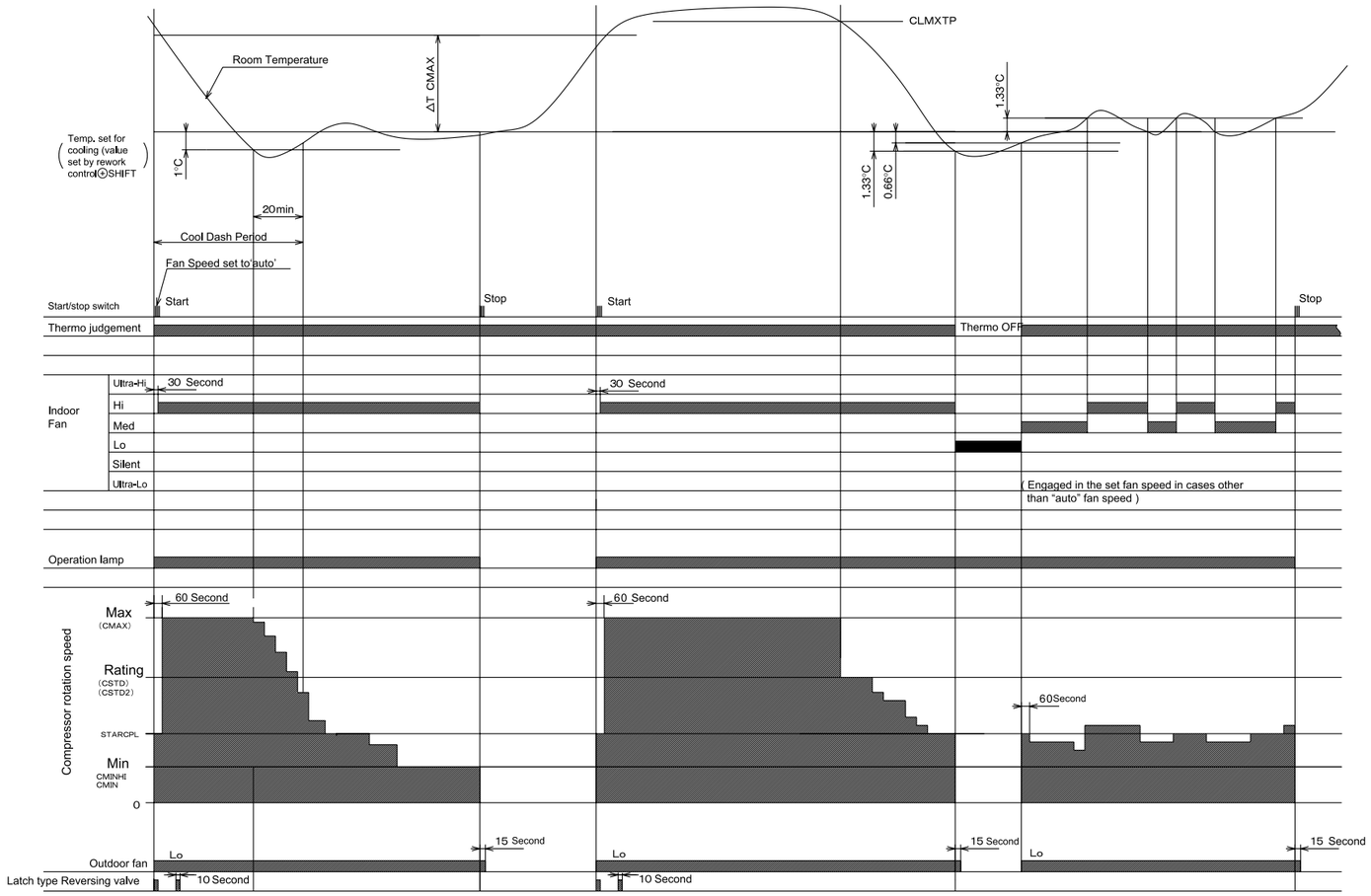

Notes:

1. Condition for entering Cool Dashed Mode: When fan is set at 'Hi' or 'Auto' Mode or when the fan speed is changed to 'Hi' or 'Auto' during cooling operation and temperature difference between indoor temperature and setting temperature + SHIFTC has a corresponding compressor rpm (calculated value in Table 2) larger than CMAX.
2. Cool Dashed will release when: (i) a maximum 25 minutes is elapsed after Cool Dashed Mode was started; (ii) room temperature less than cooling setting temperature + SHIFTC - 1°C, then maximum Cool Dashed time will be revised to 20 minutes; (iii) Thermo OFF (the compressor does not go through the steady speed period but it starts by fuzzy control).
3. During Cool Dashed operation, Thermo OFF temperature = setting temperature + SHIFTC - 3°C. After Thermo OFF, operation continues in fuzzy control.
4. The compressor minimum 'ON' time and 'OFF' time is 3 minutes.
5. During normal cooling mode, CMAX will be maintained until 60 minutes when room temperature less than CLMXTP and no time constrain when room temperature is CLMXTP and above.
6. If the fan speed set to 'Med' mode by remote control, maximum compressor rpm = CJKMAX.
7. If the fan speed set to 'Lo' mode by remote control, maximum compressor rpm = CBEMAX.
8. If the fan speed set to 'Silent' mode by remote control, maximum compressor rpm = CSZMAX.
9. During Cool Dashed, when room temperature reaches setting temperature - 1°C, compressor rpm = actual rpm x DWNRATEC.

Table 2 △TCMAX

Temperature difference	Calculated compressor rpm
1.66	2600
2.00	2600
2.33	2600
2.66	3100
3.00	3100
3.33	3100
3.66	3600
4.00	3600
4.33	3600
4.66	4100
5.00	4100
6.00	4600
6.33	4600
6.66	5100
7.00	5100
7.33	5100
7.66	5600
8.00	5600
8.33	5600
8.66	6100
9.00	6100
9.33	6100
9.66	6600
10.00	6600
10.33	6600
10.66	7100
11.00	7100

Все каталоги и инструкции здесь: https://splitsystema48.ru/instrukcii-po-ekspluatacii-kondicionerov.html

Cooling Sleep Operation

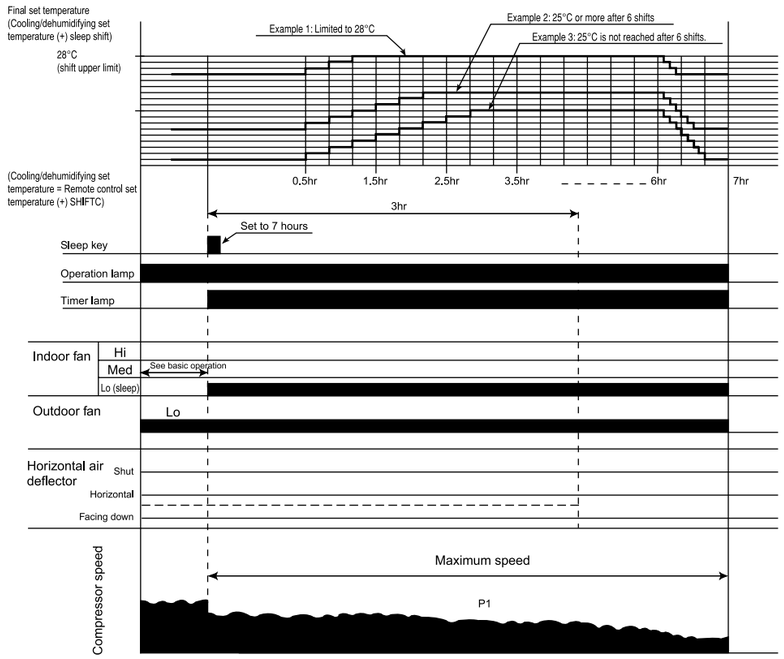

Notes:

(1) The sleep operation starts when the sleep key is pressed.
(2) When the sleep key is set, the maximum compressor speed is limited, and the indoor fan is set to “sleep Lo”.
(3) 30 minutes after the sleep key is set, the sleep shift of temperature starts, and upper shift is made at least 6 times. If 25˚C is not reached after 6 shifts, shifts repeat unit 25˚C is reached.
(4) The sleep shift upper value of set temperature is 28˚C.
(5) After 6 hours, a shift down to the initial set temperature is made at a rate of 0.33˚C/5 min.
(6) If the operation mode is changed during sleep operation, the set temperature is cleared, and shift starts from the point when switching is made.
(7) The indoor fan speed does not change even when the fan speed mode is changed.
(8) When operation is stopped during sleep operation, the set temperature when stopped, as well as the time, continue to be counted.
(9) If the set time is changed during sleep operation, all data including set temperature, time, etc. is cleared and restarted.
(10) If sleep operation is canceled by the cancel key or sleep key, all data is cleared.

Cooling Defrost

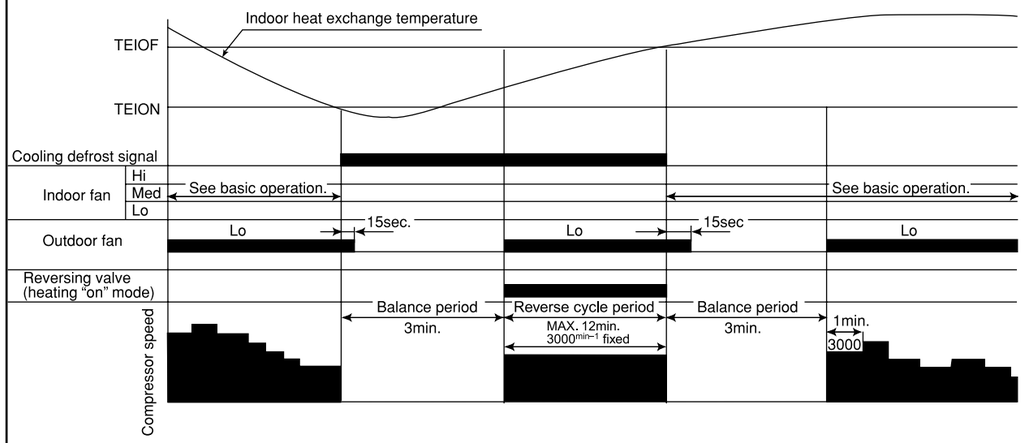

Все каталоги и инструкции здесь: https://splitsystema48.ru/instrukcii-po-ekspluatacii-kondicionerov.html

Dehumidifying

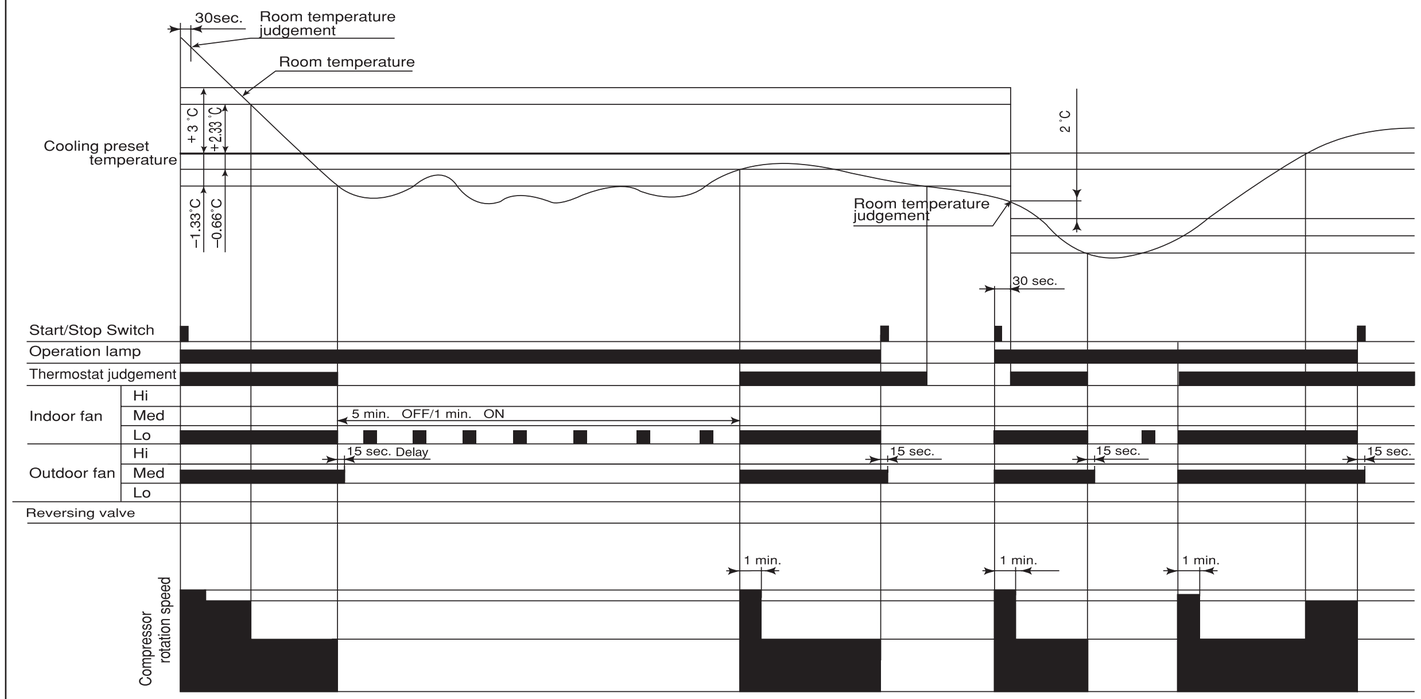

Notes:
(1) If the room temperature is (cooling preset temperature) - (1.33°C) or less after 30 seconds from starting the operation, the operation is done assuming as the preset temperature = (room temperature at the time) - (2°C).
(2) The indoor fan is operated in the "Lo" mode. During thermo OFF indoor fan will be OFF for 5 minutes and ON for 1 minute.
(3) When the operation is started by the themostat turning ON, the start of the indoor fan is delayed 32 seconds after the start of compressor operation.
(4) The compressor is operated forcedly for 3 minutes after operation is started.
(5) The minimum ON time and OFF time of the compressor are 3 minutes.

Dehumidifying Sleep Operation

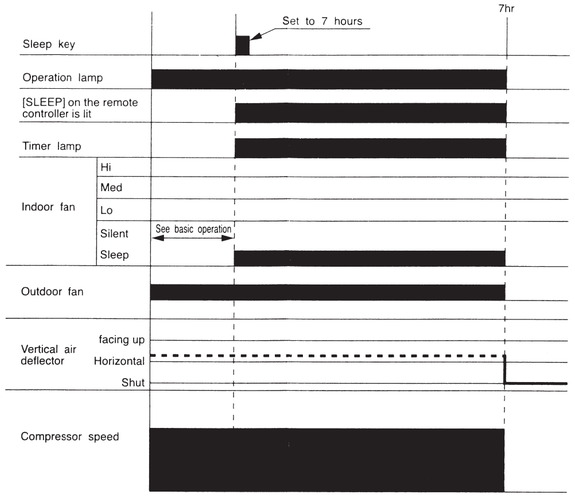

Notes:
(1) The sleep operation starts when the sleep key is pressed.
(2) When the sleep key is set, the indoor fan is set to "sleep silent" (FDOY_M or AFDOY).
(3) The indoor fan speed does not change even when the fan speed mode is changed.
(4) If the set time is changed during sleep operation, all data including set temperature, time, etc. is cleared and restarted.
(5) If sleep operation is canceled by the cancel key or sleep key, all data is cleared.
(6) If the position of air deflector is being operated using remote control, the operation will be performed at any desired position of air deflector.

Все каталоги и инструкции здесь: https://splitsystema48.ru/instrukcii-po-ekspluatacii-kondicionerov.html

Basic Heating Operation

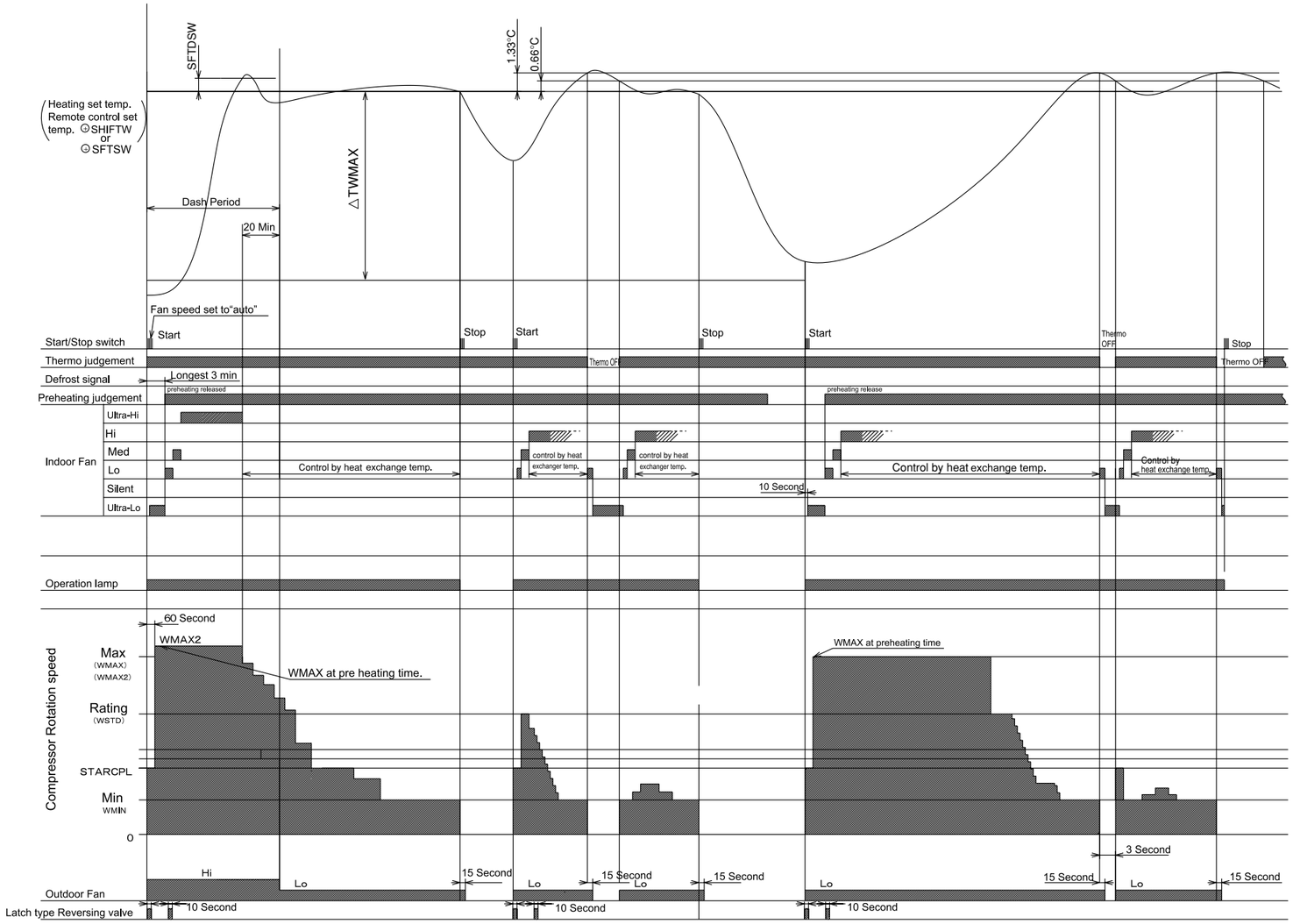

Notes:

1. Condition for entering into hot dashed mode: when fan set to “Hi” or “Auto mode” and i) indoor temperature is lower than 18°C, and ii) outdoor temperature is lower than 10°C, and iii) temperature difference between indoor temperature and set temperature + SHIFTW has a corresponding compressor rpm (calculated in Table 3) larger than WMAX.
2. Hot dashed will release (the maximum compressor speed during hot dash is finish) when i) room temperature has achieved the set temperature + SHIFTW + SFTDSW or ii) Thermo OFF.
3. During hot dash operation, thermo off temperature is set temperature + SHIFTW +3°C. After thermo off, operation continue in fuzzy control mode.
4. Compressor minimum “ON” time and “OFF” time is 3 minutes.
5. The time limit for which the maximum compressor (WMAX) or (WMAX2) during normal heating (except for hot dash) can be maintained in less than 120 minutes when the room temperature is higher than 18°C. No time limit if room temperature is less than 18°C and outdoor temperature is lower than 2°C.
6. The operation indication lamps blinks at interval of 3 seconds “ON” and 0.5 seconds “OFF” during initial cycle operation, preheating, defrosting (including balance time after defrosting is finished) or auto fresh defrosting.
7. When heating mode start, it will enter into hotkeep (preheating) if indoor heat exchanger temperature is lower than YNEOF +0.33°C and it will not enter if indoor heat exchanger temperature is equal or higher than YNEOF +0.33°C at the start of operation by using START/STOP button.
8. The limitation of compressor speed during the operation at indoor fan speed of “Med” is set to WJKMAX or below “LO” is set to WBEMAX or below and “SILENT” is set to WSZMAX or below.
9. If the room temperature falls less than 18°C in the “Ultra Lo” fan mode, the indoor fan stops. When the room temperature is 18°C +0.33 or higher, the “Ultro Lo” operation restarts. However the “Ultra-Lo” operation during preheating or preheating after defrosting will stop if the heat exchanger temperature is less than 16°C.
10. During Hot Dash and outdoor temperature lower than -5°C, maximum compressor rpm is WMAX2.
11. During Hot Dash and room temperature reaches set temperature + SFTDSW, compressor rpm is actual rpm x DWNRATEW.

Table 3 △TWMAX

Temperature difference	Calculated compressor rpm
1.66	2300
2.00	2300
2.33	2300
2.66	2800
3.00	2800
3.33	2800
3.66	3300
4.00	3300
4.33	3300
4.66	3800
5.00	3800
6.00	4300
6.33	4300
6.66	4800
7.00	4800
7.33	4800
7.66	5300
8.00	5300
8.33	5300
8.66	5800
9.00	5800
9.33	5800
9.66	6300
10.00	6300
10.33	6300
10.66	6800
11.00	6800

Все каталоги и инструкции здесь: https://splitsystema48.ru/instrukcii-po-ekspluatacii-kondicionerov.html

Reversing Valve Defrosting

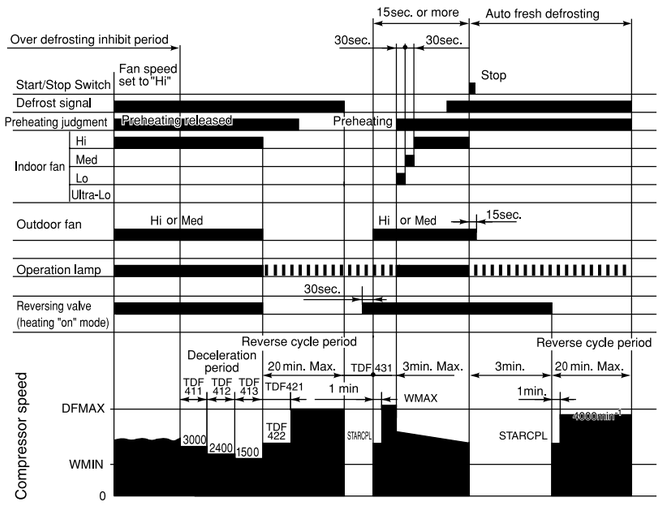

Notes:
(1) The defrosting inhibit period is set as shown in the diagram below. When defrosting has finished once, the inhibit period is newly set, based on the outdoor temperature when the compressor was started. During this period, the defrost signal is not accepted.
(2) If the difference between the room and outdoor temperatures is large when defrosting is finished, the maximum compressor speed (WMAX) or (WMAX2) can be continued for 120 minutes maximum.
(3) The defrosting period is 20 minutes maximum.
(4) When operation is stopped during defrosting, it is switched to auto refresh defrosting.
(5) Auto refresh defrosting cannot be engaged within 15 minutes after operation is started or defrosting is finished.

Setting Defrosting Inhibit Period

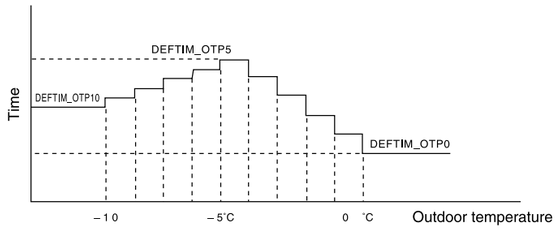

Notes:
(1) The first inhibit time after operation start is set to DEFTIM_FST.
(2) From the second time onwards, the inhibit time is set according to the time required for defrosting.
Reverse cycle operation time ≧ [DEFCOL] : DEFTIM_COL is set.
Reverse cycle operation time < [DEFCOL] : The time corresponding to outdoor temperature is set.

Heating Sleep Operation

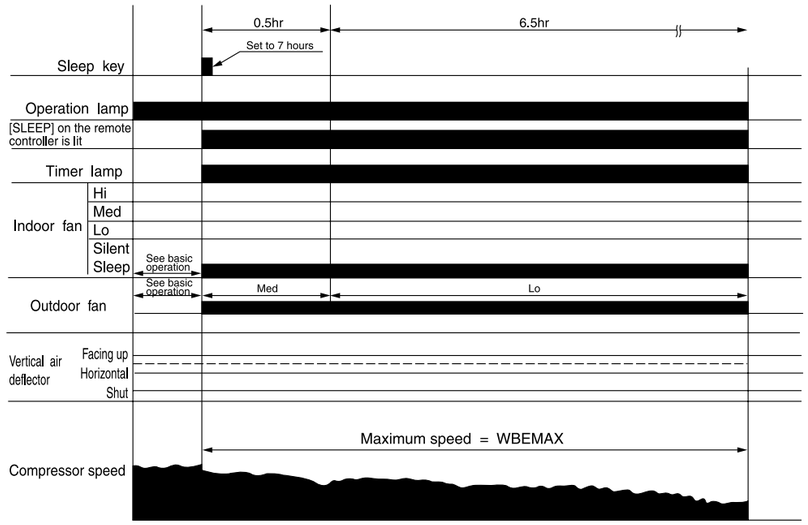

Notes:
(1) The sleep operation starts when the sleep key is pressed.
(2) When the sleep key is set, the maximum compressor speed is limited to WBEMAX, and the indoor fan is set to “Sleep Silent” (FWSOY).
(3) If the operation mode is changed during sleep operation, the changed operation mode is set and sleep control starts.
(4) The indoor fan speed does not change even when the fan speed mode is changed. (Lo)
(5) When defrosting is to be set during sleep operation, defrosting is engaged and sleep operation is restored after defrosting.
(6) When operation is stopped during sleep operation, the set temperature when stopped, as well as the time, continue to be counted.
(7) If the set time is changed during sleep operation, all data including set temperature, time, etc. is cleared and restarted.
(8) If sleep operation is cancelled by the cancel key or sleep key, all data is cleared.
(9) There is no preset temperature shift due to time elapse.

Все каталоги и инструкции здесь: https://splitsystema48.ru/instrukcii-po-ekspluatacii-kondicionerov.html

REFRIGERATING CYCLE DIAGRAM

MODEL RAK-65NH5A / RAC-65NH5

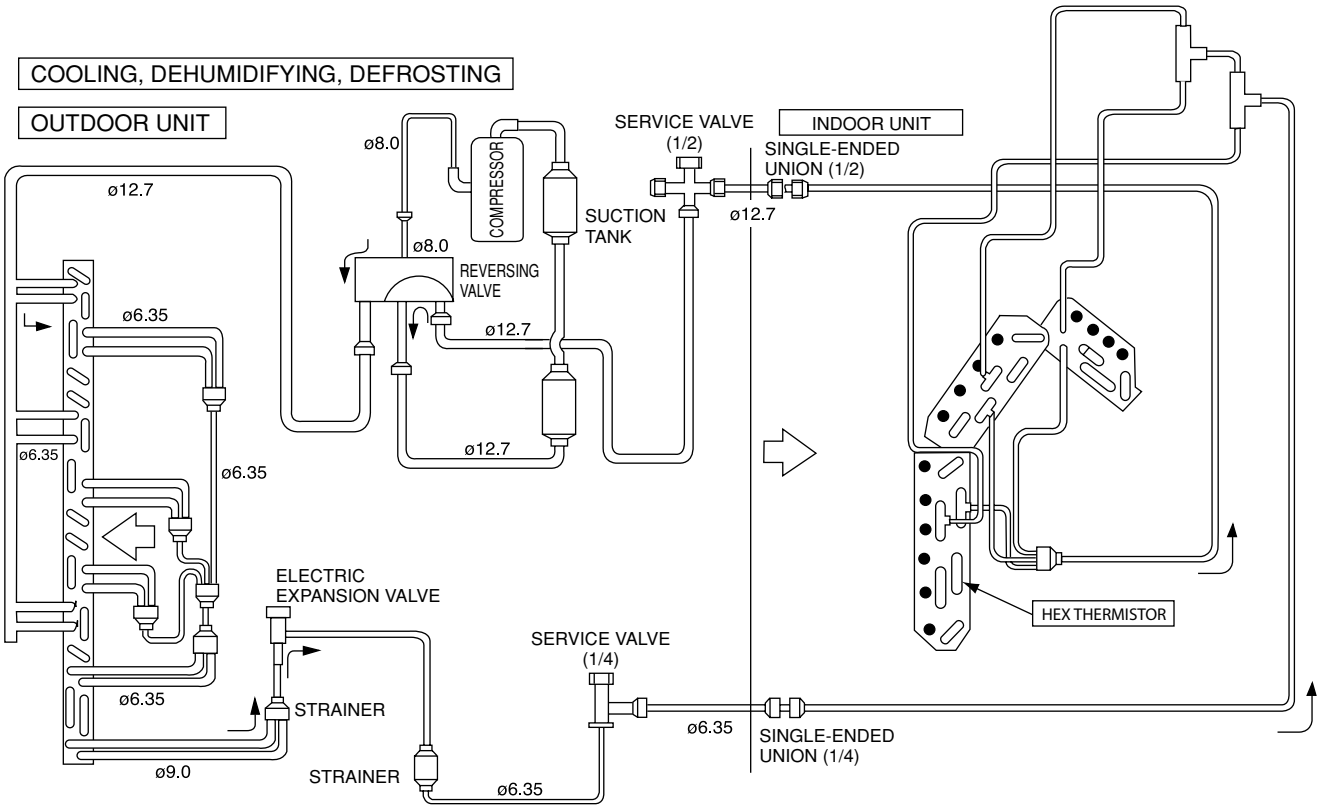

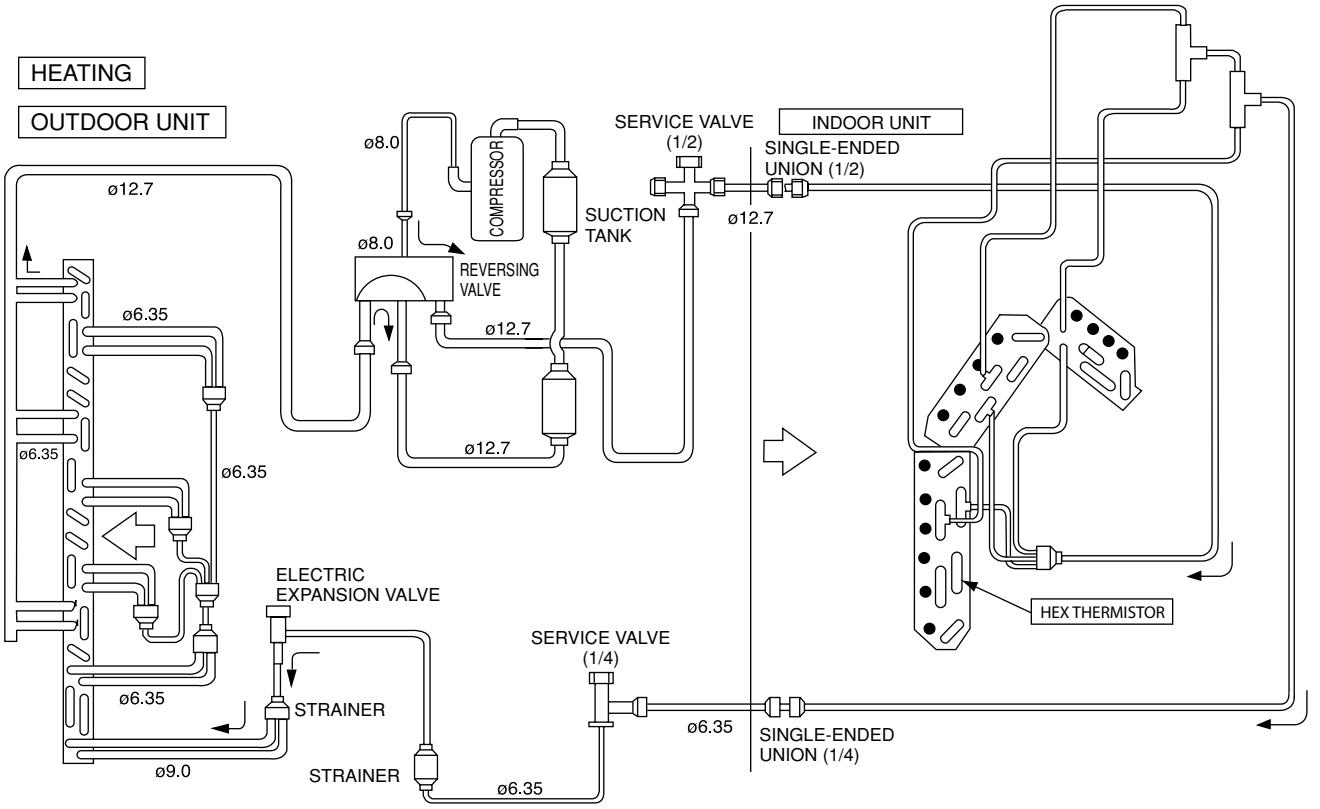

Все каталоги и инструкции здесь: https://splitsystema48.ru/instrukcii-po-ekspluatacii-kondicionerov.html

AUTO SWING FUNCTION

INPUT SIGNAL	PRESENT CONDITION			OPERATING SPECIFICATION	REFERENCE
	OPERATION	OPERATION MODE	AIR DEFLECTOR		
KEY INPUT	STOP	EACH MODE	STOP	ONE SWING (CLOSING AIR DEFLECTOR) ① DOWNWARD ② UPWARD	INITIALIZE AT NEXT OPERATION.
			DURING ONE SWING	STOP AT THE MOMENT.	
	DURING OPERATION	AUTO COOL COOL FAN AUTO DRY DRY	STOP	START SWINGING ① DOWNWARD ② UPWARD ③ DOWNWARD	
			DURING SWINGING	STOP AT THE MOMENT.	
		AUTO HEAT HEAT CIRCULATOR	STOP	START SWINGING ① DOWNWARD ② UPWARD ③ DOWNWARD	
			DURING SWINGING	STOP AT THE MOMENT.	
THERMO. ON (INTERNAL FAN ON)	DURING OPERATION	AUTO DRY DRY AUTO HAET HEAT CIRCULATOR	TEMPORARY STOP	START SWING AGAIN.	
THERMO. ON (INTERNAL FAN OFF)			DURING SWINGING	STOP SWINGING TEMPORARILY. (SWING MODE IS CLEARED IF SWING COMMAND IS TRANSMITTED DURING TEMPORARY STOP.)	
MAIN SWITCH ON	STOP	COOL FAN DRY	STOP DURING ONE SWING	INITIALIZE ① DOWNWARD ② UPWARD	
		HEAT CIRCULATOR	STOP DURING ONE SWING	INITIALIZE ① DOWNWARD	
MAIN SWITCH OFF	DURING OPERATION	EACH MODE	STOP DURING SWINGING	ONE SWING (CLOSING AIR DEFLECTOR) ① DOWNWARD ② UPWARD	INITIALIZE AT NEXT OPERATION.
			DURING INITIALIZING		
CHANGE OF OPERATION	DURING OPERATION	EACH MODE	STOP	INITIALIZING CONDITION OF EACH MODE.	
			DURING SWINGING	STOP SWINGING AND MODE BECOMES INITIALIZING CONDITION.	

Все каталоги и инструкции здесь: https://splitsystema48.ru/instrukcii-po-ekspluatacii-kondicionerov.html

DESCRIPTION OF MAIN CIRCUIT OPERATION

1. Reset Circuit

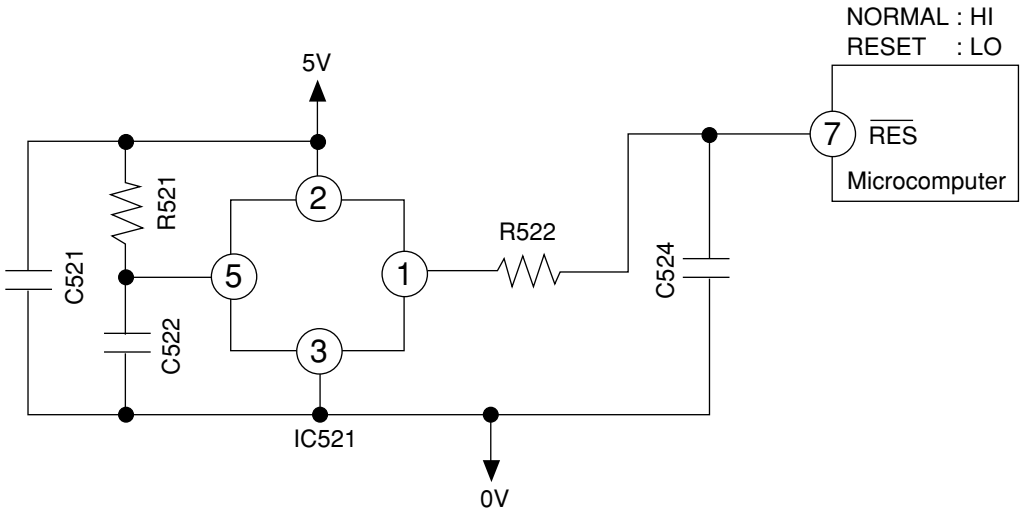

Fig. 1-1

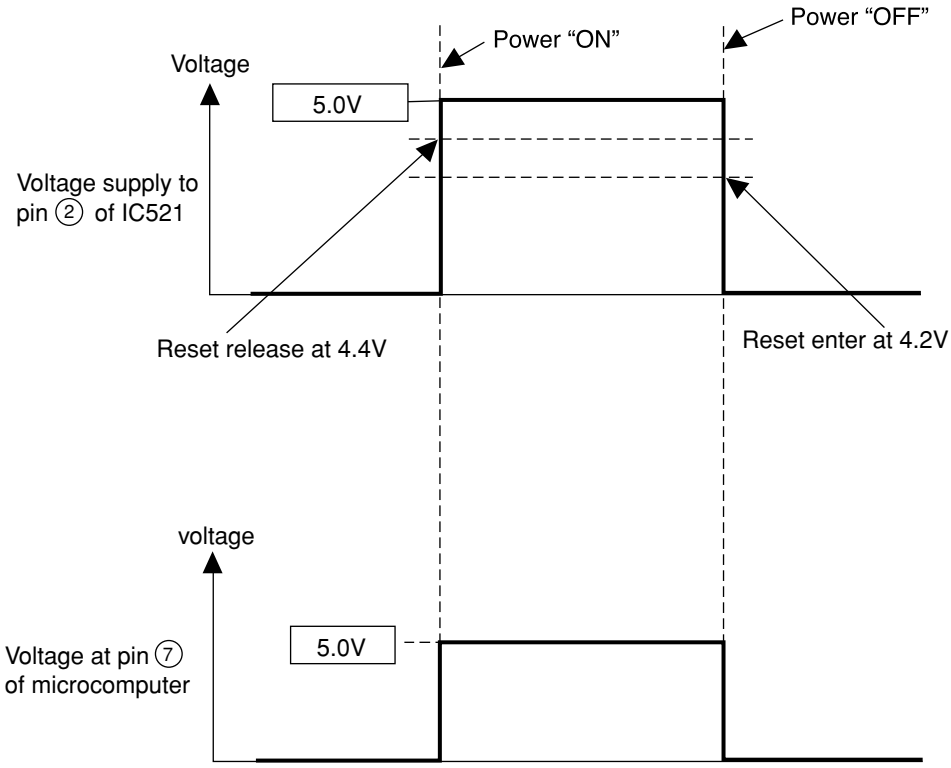

Fig. 1-2

- The reset circuit initializes the microcomputer program when power is ON or OFF.
- Low voltage at pin ⑦ resets the microcomputer and Hi activates the microcomputer.
- When power "ON" 5V voltage rises and reaches 4.4V, pin ① of IC521 is set to "Hi". At this time the microcomputer starts operation.
- When power "OFF" voltage drops and reaches 4.2V, pin ① of IC521 is set to "Low". This will RESET the microcomputer.

Все каталоги и инструкции здесь: https://splitsystema48.ru/instrukcii-po-ekspluatacii-kondicionerov.html

2. Receiver Circuit

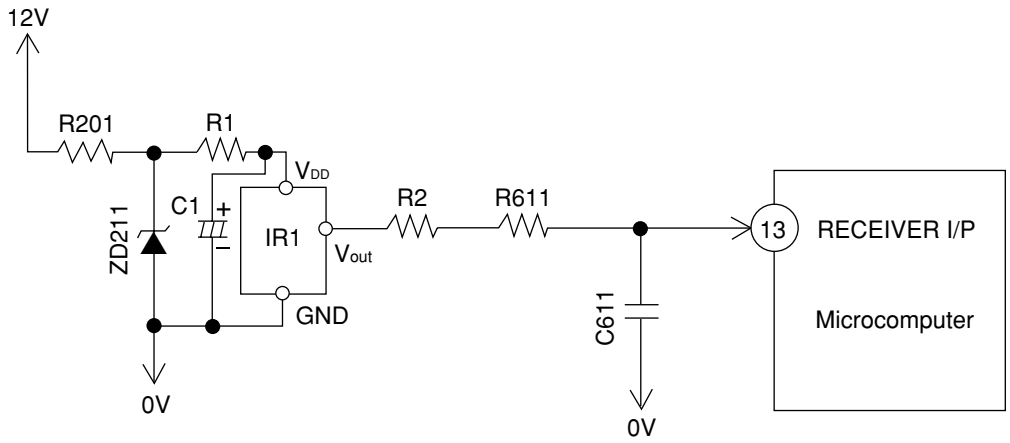

Fig. 2-1

- The light receiver unit receives the infrared signal from the wireless remote control. The receiver amplifies and shapes the signal and outputs it.

3. Buzzer Circuit

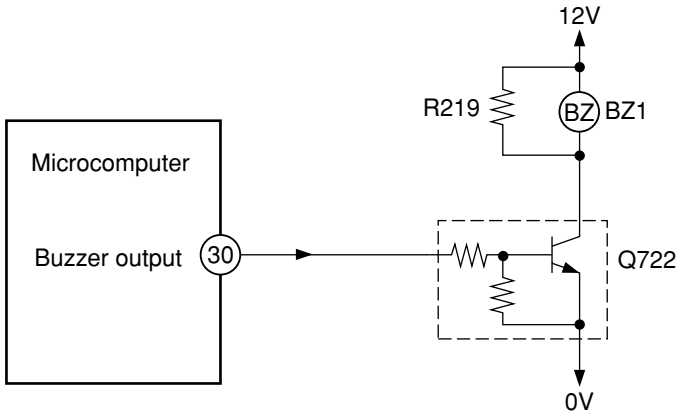

Fig. 3-1 Buzzer Circuit

- When the buzzer sounds, an approx. 3.9kHz square signal is output from buzzer output pin ㉚ of the microcomputer. After the amplitude of this signal has been set to 12Vp-p by a transistor, it is applied to the buzzer. The piezoelectric element in the buzzer oscillates to generate the buzzer's sound.

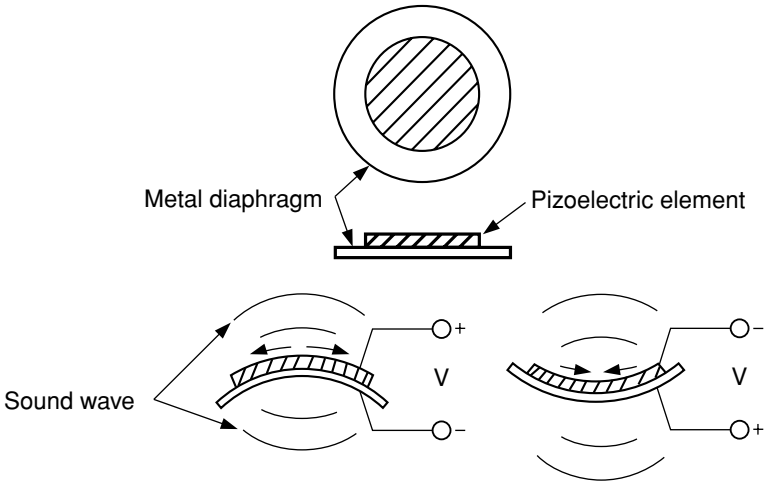

Fig. 3-2 Buzzer Operation

Все каталоги и инструкции здесь: https://splitsystema48.ru/instrukcii-po-ekspluatacii-kondicionerov.html

4. Auto Sweep Motor Circuit

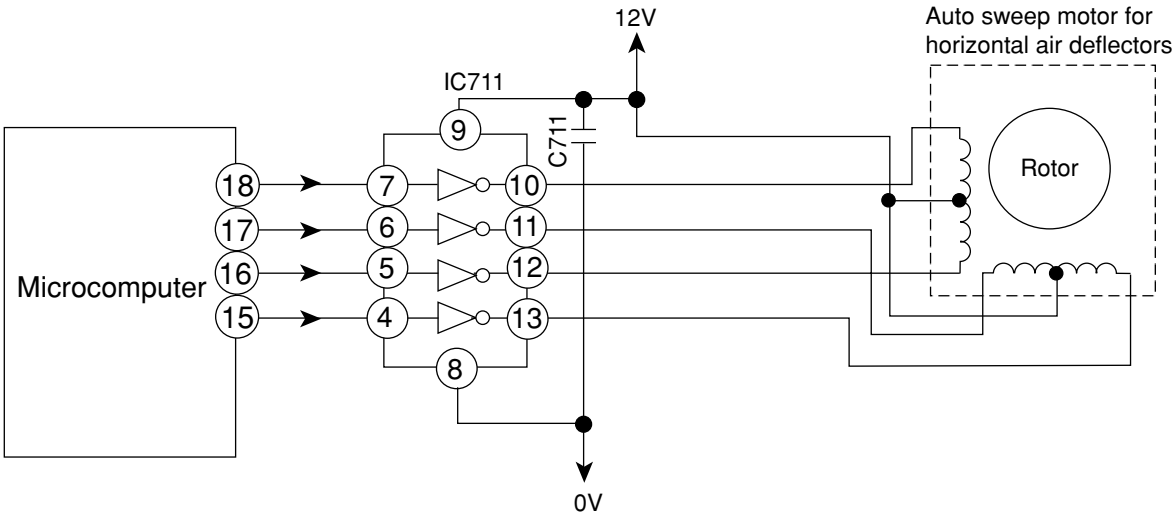

Fig.4-1

- Fig. 4-1 shows the Auto sweep motor drive circuit; the signals shown in Fig.4-2 are output from pins ⑮ – ⑱ of microcomputer.

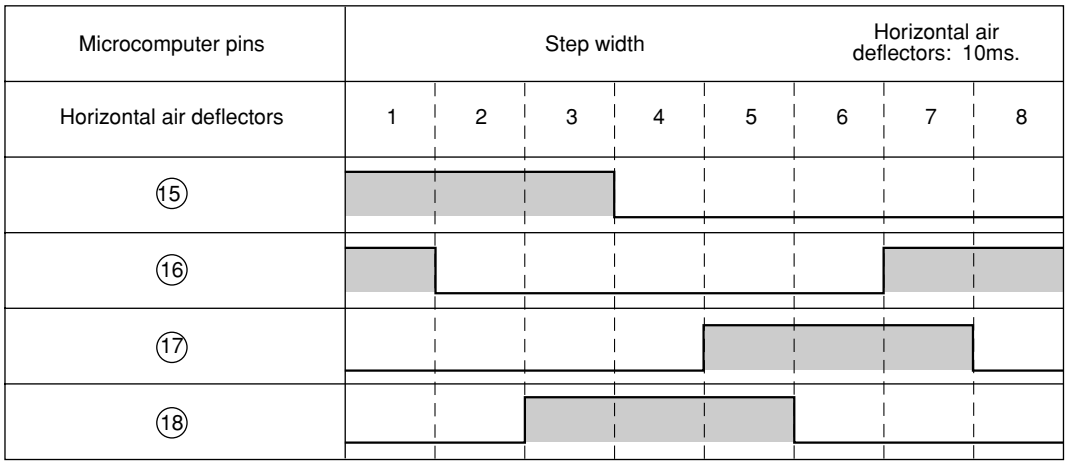

Fig.4-2 Microcomputer Output Signals

- As the microcomputer's outputs change as shown in Fig.4-2, the core of the auto sweep motor is excited to turn the rotor. Table 4-1 shows the rotation angle of horizontal air deflectors.

Table 4-1 Auto sweep Motor Rotation

	Rotation angle per step (˚)	Time per step (ms.)
Horizontal air deflectors	0.0882	10

Все каталоги и инструкции здесь: https://splitsystema48.ru/instrukcii-po-ekspluatacii-kondicionerov.html

5. Room Temperature Thermistor Circuit

- Fig. 5-1 shows the room temperature thermistor circuit.

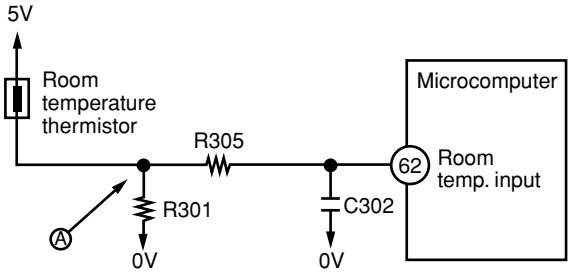

Fig. 5-1

- The voltage at Ⓐ depends on the room temperature as shown in Fig. 5-2.

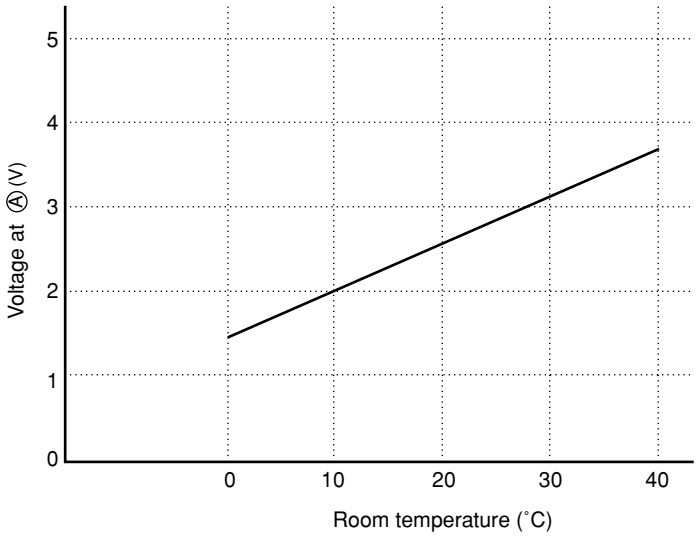

Fig. 5-2

6. Heat exchanger temperature thermistor circuit

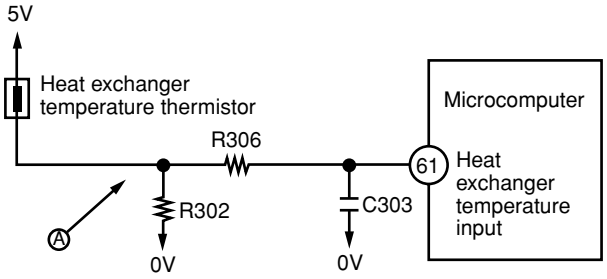

Fig. 6-1

- The circuit detects the indoor heat exchanger temperature and controls the following.

  (1) Preheating.

  (2) Low-temperature defrosting during cooling and dehumidifying operation.

  (3) Detection of the reversing valve non-operation or heat exchanger temperature thermistor open.

  The voltage at Ⓐ depends on the heat exchanger temperature as shown in Fig. 6-2.

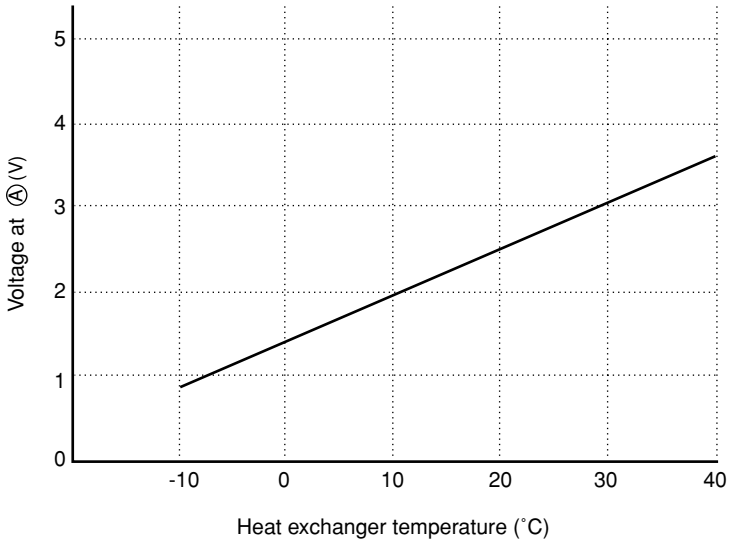

Fig. 6-2

Все каталоги и инструкции здесь: https://splitsystema48.ru/instrukcii-po-ekspluatacii-kondicionerov.html

7. Initial Setting Circuit (IC401)

- When power is supplied, the microcomputer reads the data in IC401 or IC402 (E^2PROM) and sets the preheating activation value and the rating and maximum speed of the compressor, etc. to their initial values.
- Data of self-diagnosis mode is stored in IC401 or IC402; data will not be erased even when power is turned off.

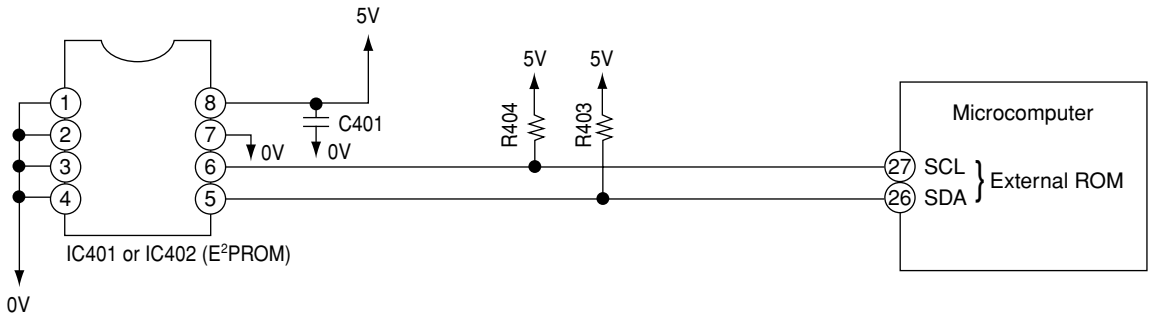

Fig. 7-1

Все каталоги и инструкции здесь: https://splitsystema48.ru/instrukcii-po-ekspluatacii-kondicionerov.html

1. Power Circuit

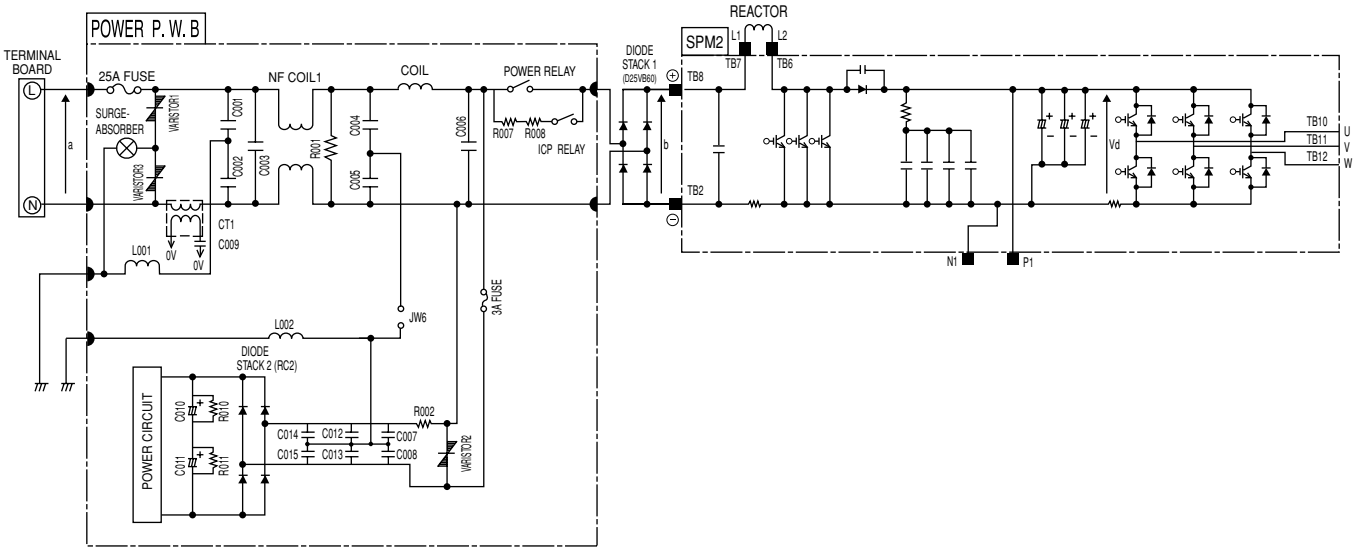

Fig. 1-1

- This circuit full-wave rectifies 220-240V AC applied between terminals L and N, and boosts it to a required voltage with the active module, to create a DC voltage.

The voltage becomes 260-360V when the compressor is operated

(1) Active module

The active filter, consisting of a reactor and switching element, eliminates higher harmonic components contained in the current generated when the compressor is operated, and improves the power-factor.

(2) Diode stacks

These rectify the 220-240V AC from terminals L and N to a DC power supply.

< Reference >

- In case of malfunction or defective connection: Immediately after the compressor starts, it may stop due to “abnormally low speed” active error, etc.

  The compressor may continue to operate normally, but the power-factor will decrease, the operation current will increase, and the overcurrent breaker of the household power board will probably activate.
- In case of active module faulty or defective connection:

  Although the compressor continues to operate normally, the power-factor will decrease, the operation current will increase, and the overcurrent breaker of the household power board will probably activate.

< Reference >

- If diode stack 1 is faulty, the compressor may stop due to “lp”, “anbormally low speed”, etc. immediately after it starts, or it may not operate at all because no DC voltage is generated between the positive ⊕ and negative ⊖ terminals.

  If diode stack 1 is faulty, be aware that the 25A fuse might also have blown.
- If diode stack 2 is faulty, DC voltage may not be generated and the compressor may not operate at all. Also, be aware that the 3A fuse might have blown.

Все каталоги и инструкции здесь: https://splitsystema48.ru/instrukcii-po-ekspluatacii-kondicionerov.html

(3) Smoothing capacitor (C501, C502, C503)

This smoothes (averages) the voltage rectified by the diode stacks.

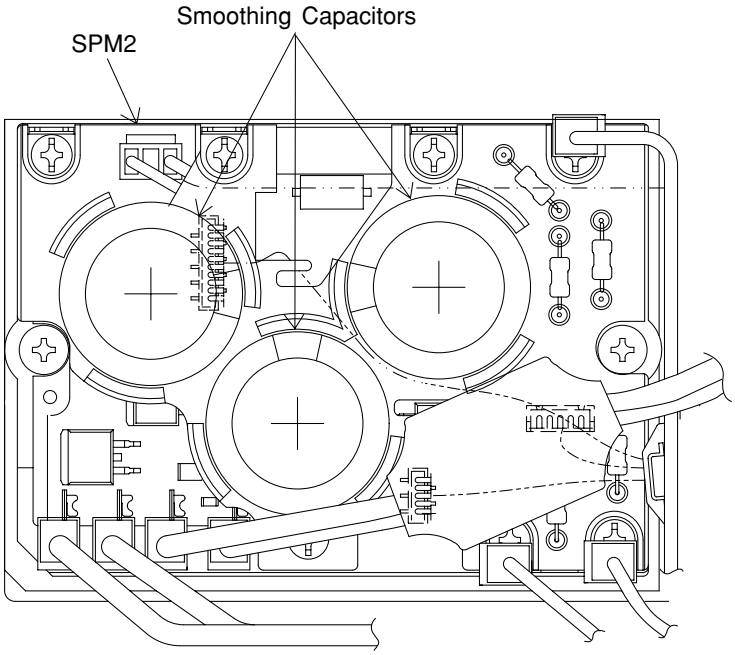

Fig. 1-2

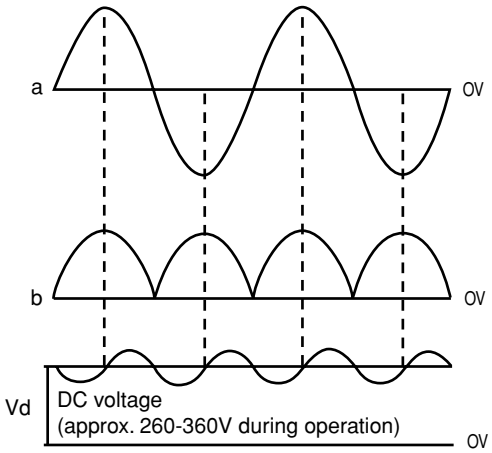

Fig. 1-3

- Be careful to avoid an electric shock as a high voltage is generated. Also take care not to cause a short-circuit through incorrect connection of test equipment terminals. The circuit board could be damaged.

(4) Smoothing capacitor (C010, C011)
This smoothes (averages) the voltage rectified by the diode stack2. A DC voltage is generated in the same way as in Fig. 1-3.
Voltage between + side of C010 and – side of C011 is about 330V.

(5) C001 to C003, C012 to C015, C007, C008, NF COIL1, COIL, absorb electrical noise generated during operation of compressor, and also absorb external noise entering from power line to protect electronic parts.

(6) Surge absorber, Varistor 1, 2, 3,
absorbs external power surge.

(7) Inrush protective resistor (R007, R008)
This works to protect from overcurrent when power is turned on.

< Reference >

- When inrush protective resistor is defective, diode stack may malfunction. As a result, DC voltage is not generated and no operation can be done.

Все каталоги и инструкции здесь: https://splitsystema48.ru/instrukcii-po-ekspluatacii-kondicionerov.html

2. Indoor/Outdoor Interface Circuit

- The interface circuit superimposes an interface signal on the DC 35V line supplied from the outdoor unit to perform communications between indoor and outdoor units. This circuit consists of a transmiting circuit which superimposes an interface signal transmit from the microcomputer on the DC 35V line and a transmiting circuit which detects the interface signal on the DC 35V line and outputs it to the microcomputer.
- Communications are performed by mutually transmiting and receiving the 4-frame outdoor request signal one frame of which consists of a leader of approx. 100 ms., start bit, 8-bit data and stop bit and the command signal with the same format transmit from the indoor unit.
- Communication signal from outdoor microcomputer to indoor microcomputer. At first outdoor microcomputer will send a request signal (SDO) to indoor microcomputer. A high-frequency IF signal approx. 38 KHz is generated and modulated by the request signal (SDO) inside the outdoor microcomputer then output to pin ⑪ of microcomputer. This modulated IF signal is output to pin ㉚ of HIC and amplified by amp. This signal is superimposed to DC 35V line via C801 and L801.
  To prevent erroneous reception, the outdoor microcomputer is designed so that it cannot receive a signal while it is outputting a request signal.
  The receiving circuit in the indoor unit consists of a comparator and transistor. The interface signal from the outdoor unit on the DC 35V line is supplied to C821, where DC components are eliminated, and is then shaped by the comparator. The shaped signal is detected by diode, amplified by amp, and output to pin ㊾ of the indoor microcomputer.
  Fig. 2-2 shows the voltages at each component when data is transferred from the outdoor microcomputer to the indoor microcomputer.
- Communication signal from indoor microcomputer to outdoor microcomputer. The request signal (SDO) generates by indoor microcomputer is output to pin ㊿, and amplifies by C801. IF signal approx. 38 kHz is generated by comparator, then modulate by the request signal from pin ㊿ of indoor microprocessor. This modulated IF signal is then amplified and superimposed to DC 35V line via L801 and C802 of indoor interface circuit.
  Fig. 2-3 shows the voltages at each component when data is transferred from outdoor microcomputer to indoor microcomputer.
  The circuit operation of the outdoor receiving circuit is same as indoor receiving circuit.

Все каталоги и инструкции здесь: https://splitsystema48.ru/instrukcii-po-ekspluatacii-kondicionerov.html

- Fig. 2-1 shows the interface circuit used for the indoor and outdoor microcomputers to communicate with each other.

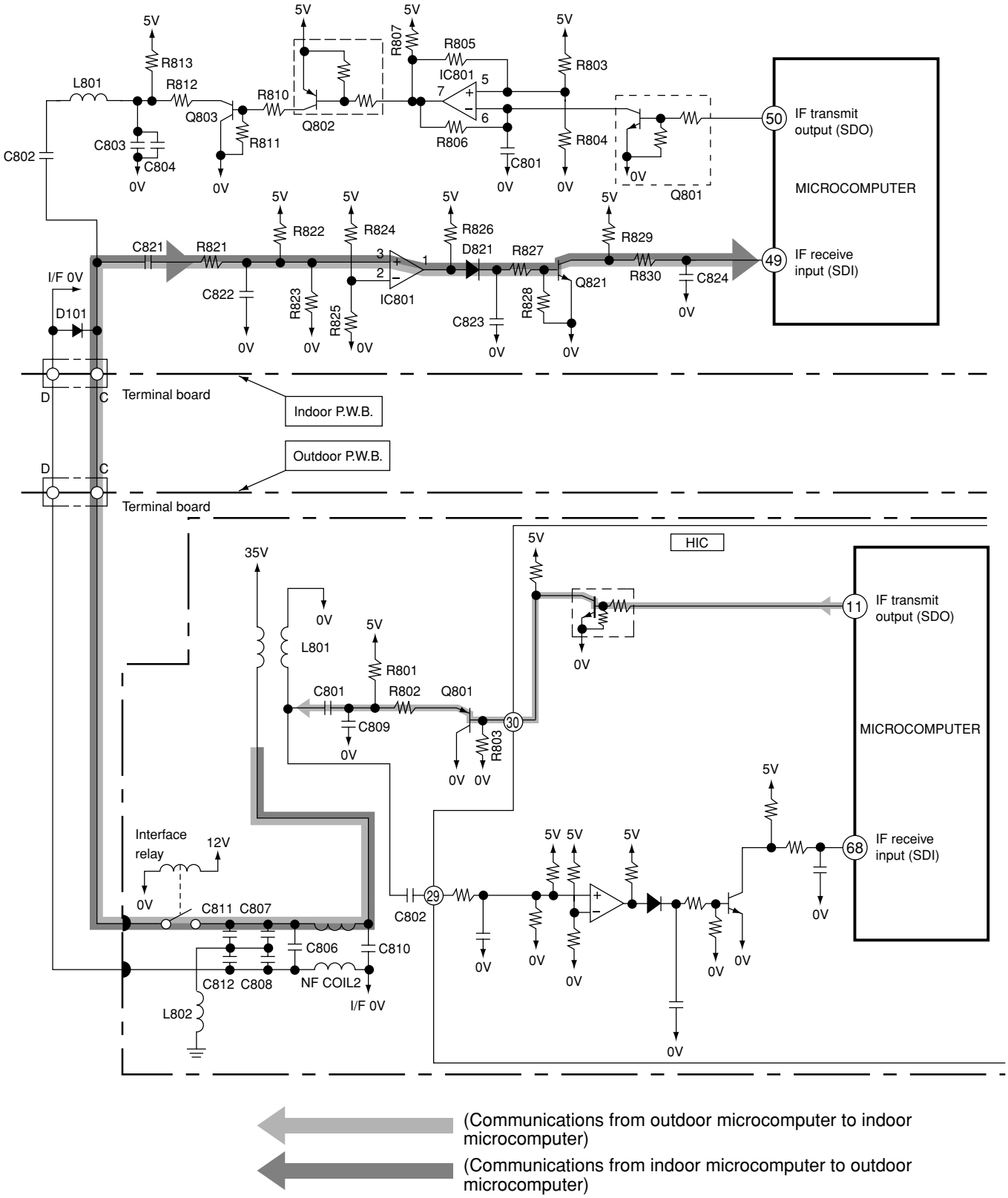

Fig. 2-1 Indoor/outdoor interface Circuit

Все каталоги и инструкции здесь: https://splitsystema48.ru/instrukcii-po-ekspluatacii-kondicionerov.html

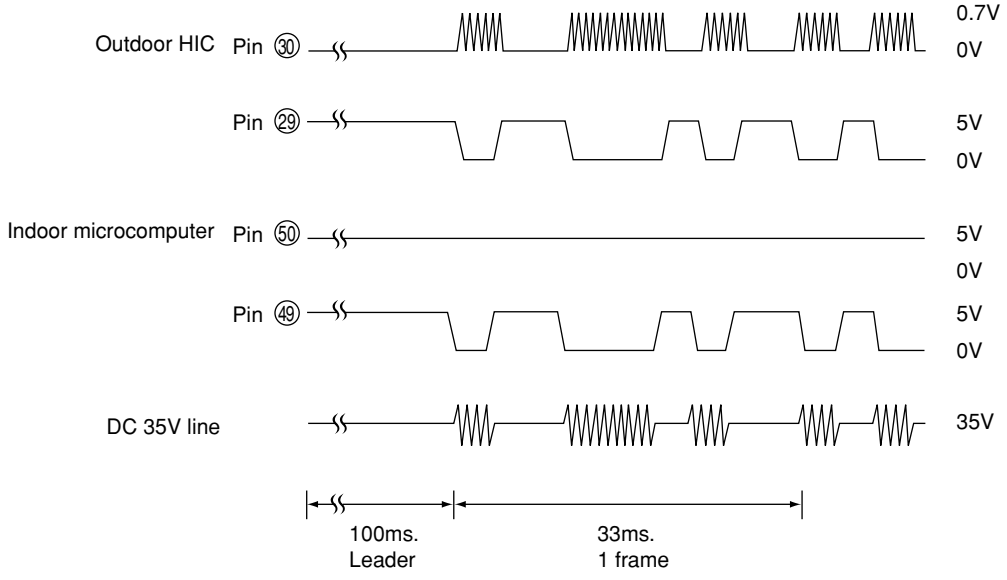

Fig. 2-2 Voltages Waveforms of indoor / Outdoor Microcomputers (Outdoor to Indoor Communications)

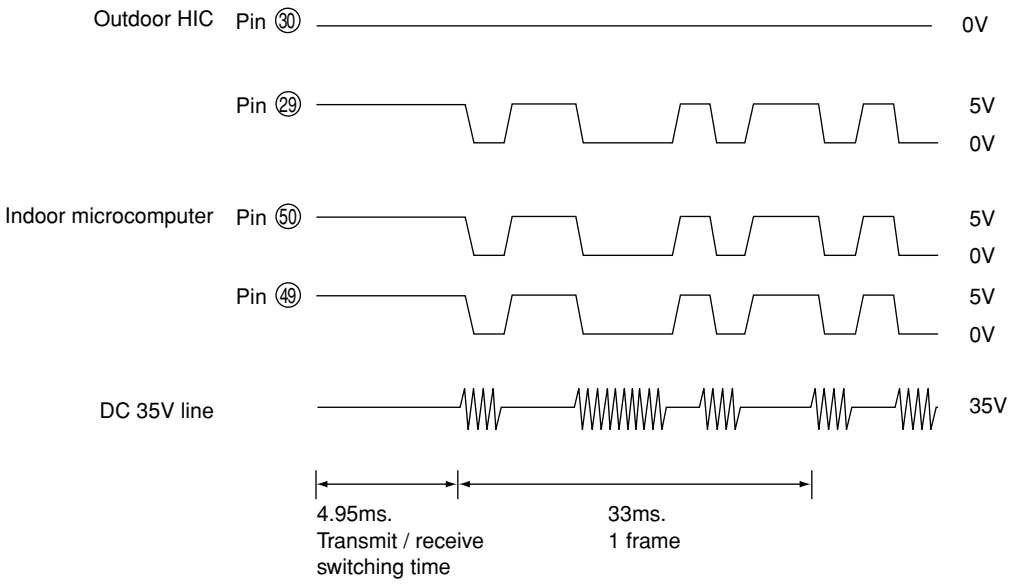

Fig. 2-3 Voltages Waveforms of indoor / Outdoor Microcomputers (Indoor to Outdoor Communications)

Все каталоги и инструкции здесь: https://splitsystema48.ru/instrukcii-po-ekspluatacii-kondicionerov.html

[Serial Communications Format during Normal Communications]

(1) Outdoor microcomputer (HIC) to indoor microcomputer

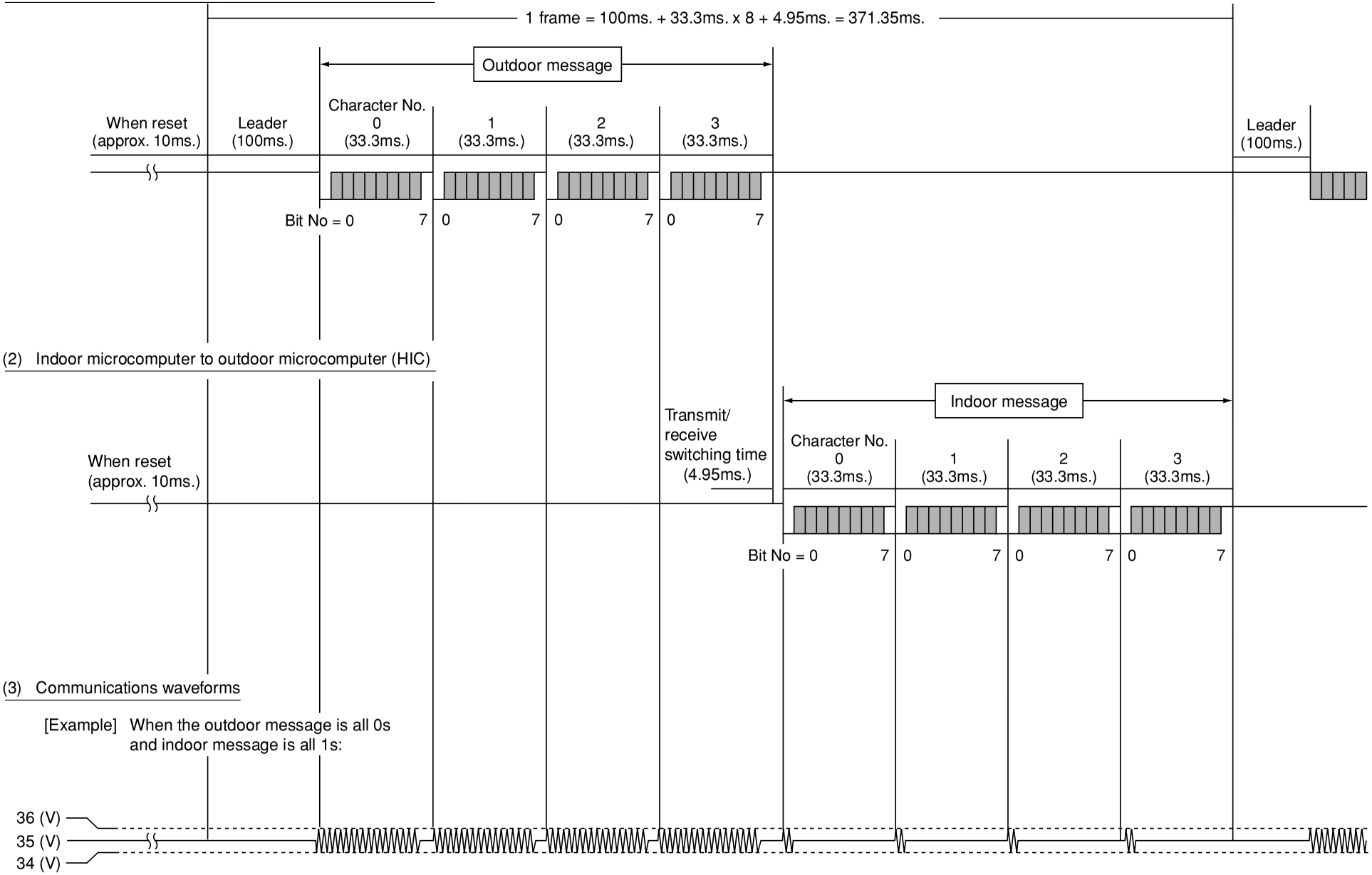

Fig. 2-4

Все каталоги и инструкции здесь: https://splitsystema48.ru/instrukcii-po-ekspluatacii-kondicionerov.html

[Serial Communications Data]

(1) Outdoor message

Character No.	Bit No.	Contents	Data
0	0	Multi-bit	1/0
	1		0
	2	During forced operation	1/0
	3	Defrost request signal	1/0
	4	Self-diagnosis (0 LSB)	1/0
	5	Self-diagnosis (1)	1/0
	6	Self-diagnosis (2)	1/0
	7	Self-diagnosis (3 MSB)	1/0
1	0	Outside temperature (0 LSB)	1/0
	1	Outside temperature (1	1/0
	2	Outside temperature (2)	1/0
	3	Outside temperature (3)	1/0
	4	Outside temperature (4)	1/0
	5	Outside temperature (5)	1/0
	6	Outside temperature (6)	1/0
	7	Outside temperature (7 MSB)	1/0
2	0	Compressor during operation	1/0
	1	Compressor during operation	1/0
	2	Actual compressor rotation speed (0 LSB)	1/0
	3	Actual compressor rotation speed (1)	1/0
	4	Actual compressor rotation speed (2)	1/0
	5	Actual compressor rotation speed (3)	1/0
	6	Actual compressor rotation speed (4)	1/0
	7	Actual compressor rotation speed (5 MSB)	1/0
3	0		0
	1	Fan-7-step request	1
	2		0
	3		0
	4		0
	5		0
	6		0
	7		0

(2) Indoor message

Character No.	Bit No.	Contents	Data
0	0	Operation mode (0 LSB)	1/0
	1	Operation mode (1)	1/0
	2	Operation mode (2 MSB)	1/0
	3	Indoor in-operation bit	1/0
	4	Capacity code (0 LSB)	0
	5	Capacity code (1)	0
	6	Capacity code (2)	0
	7	Capacity code (3 MSB)	0
1	0	Fan (0 LSB)	1/0
	1	Fan (1	1/0
	2	Fan (2 MSB)	1/0
	3	2-way valve	0
	4	Reversing valve	1/0
	5		0
	6		0
	7	Compressor ON	1/0
2	0	Compressor command speed (0 LSB)	1/0
	1	Compressor command speed (1)	1/0
	2	Compressor command speed (2)	1/0
	3	Compressor command speed (3)	1/0
	4	Compressor command speed (4)	1/0
	5	Compressor command speed (5)	1/0
	6	Compressor command speed (6)	1/0
	7	Compressor command speed (7 MSB)	1/0
3	0	15/20(A)	1/0
	1	OVL up	1/0
	2		1/0
	3	Compressor minimum rotation speed (0 LSB)	1/0
	4	Compressor minimum rotation speed (1)	1/0
	5	Compressor minimum rotation speed (2)	1/0
	6	Compressor minimum rotation speed (3)	1/0
	7	Compressor minimum rotation speed (4 MSB)	1/0

Все каталоги и инструкции здесь: https://splitsystema48.ru/instrukcii-po-ekspluatacii-kondicionerov.html

3. Power Module Circuit

- Fig. 3-1 shows the system power module and its peripheral circuit.
  The three transistors on the positive ⊕ side are called the upper arm, and the three transistors on the negative ⊖ side, the lower arm.

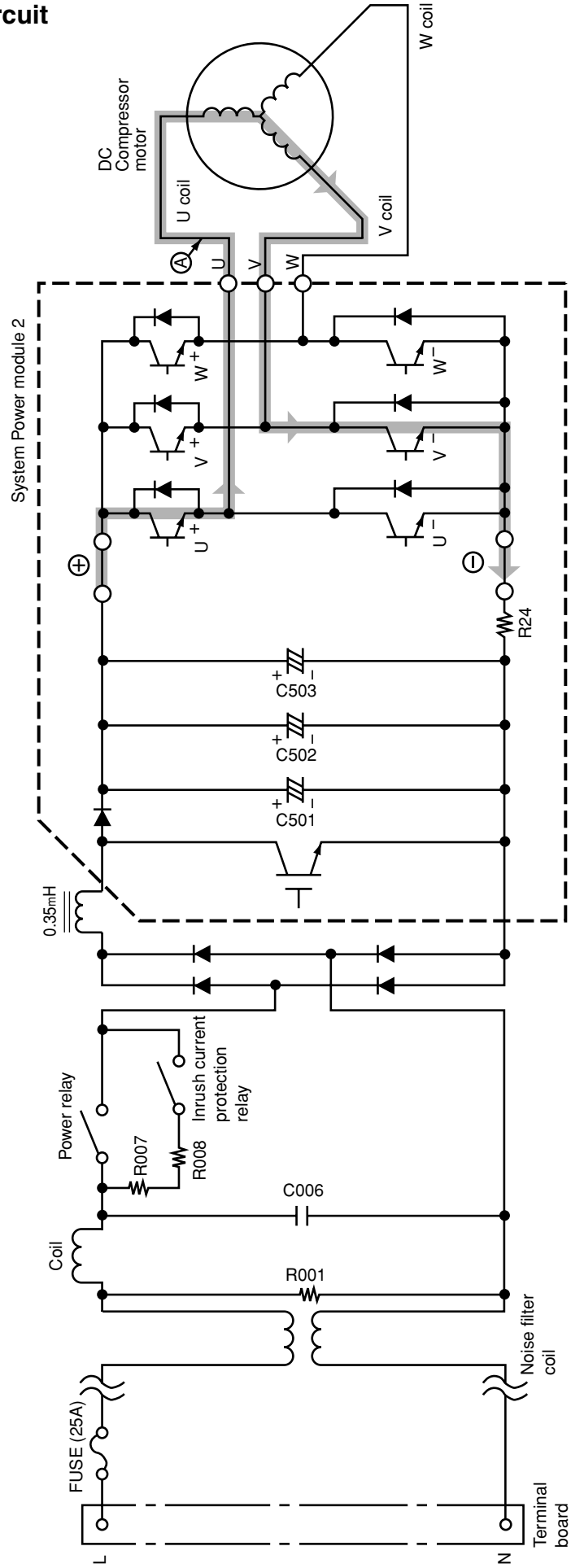

Fig. 3-1 Power module circuit (U^+ is ON, V^- is ON)

Все каталоги и инструкции здесь: https://splitsystema48.ru/instrukcii-po-ekspluatacii-kondicionerov.html

- DC 260-360V is input to system power module and system power module switches power supply current according to rotation position of magnet rotor. The switching order is as shown in Fig. 3-2.

[At point E: U^+ is ON, V^- is ON (circuit in Fig. 3-1)
At point F: U^+ is chopped (OFF), V^- is ON (circuit in Fig. 3-4)]

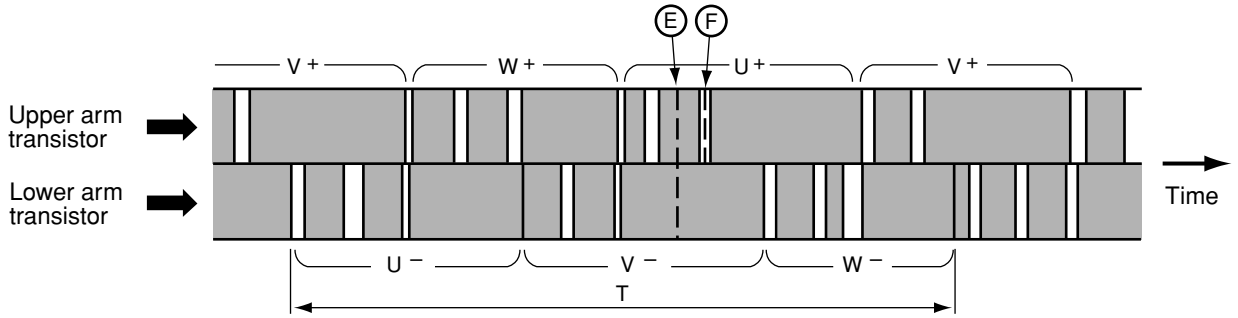

Fig. 3-2 Switching order of power module

- Upper arm transistor is controlled to ON/OFF by 3.3kHz chopper signal. Rotation speed of the compress is proportional to duty ratio (ON time/ ON time + OFF time) of this chopper signal.
- Time T in Fig. 3-2 shows the switching period, and relation with rotation speed (N) of the compressor is shown by formula below;

$$N = 60/2 \times 1/T$$

- Fig. 3-3 shows voltage waveform at each point shown in Figs. 3-1 and 3-4. First half of upper arm is chopper, second half is ON, and first half of lower arm is chopper, second half is ON.

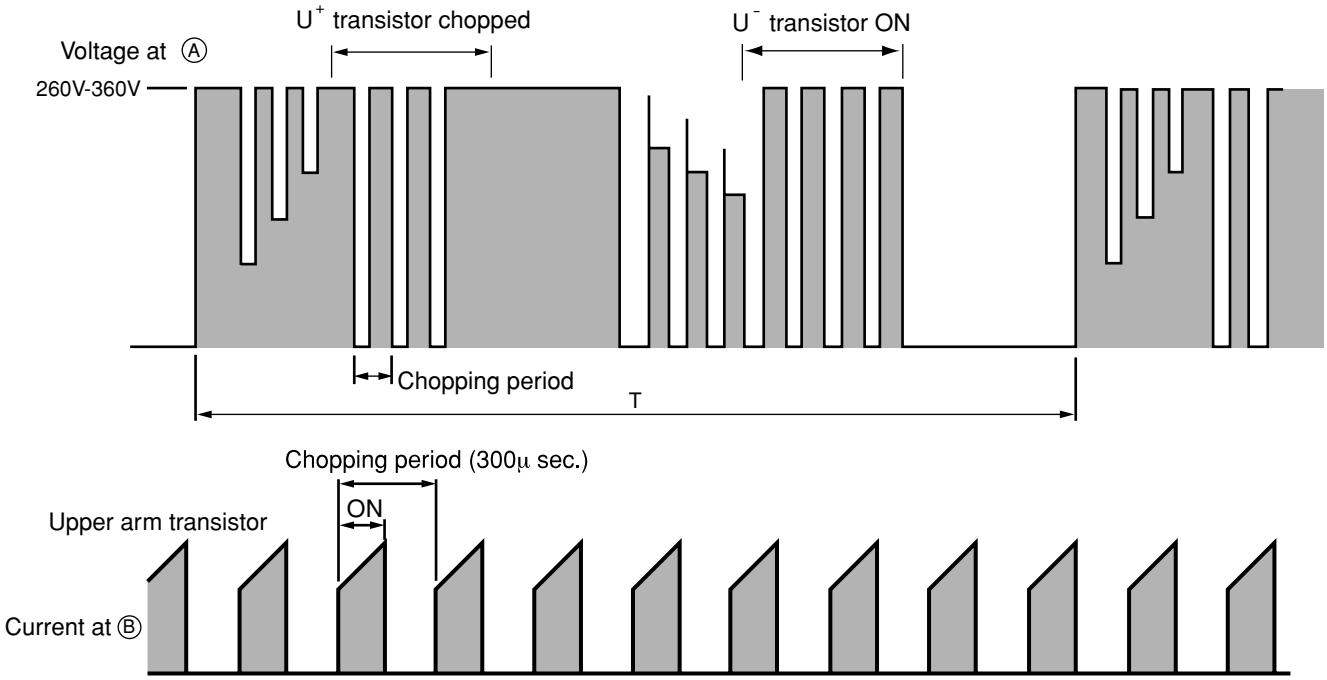

Fig. 3-3 Voltage waveform at each point

- When power is supplied $U^+ \rightarrow U^-$, because of that U^+ is chopped, current flows as shown below; Ⓑ
  (1) When U^+ transistor is ON: U^+ transistor → U coil → V coil → V^- transistor → DC current detection resistor → Point Ⓑ (Fig. 3-1)
  (2) When U^+ transistor is OFF: (by inductance of motor coil) U coil → V coil → V^- transistor → Return diode → Point Ⓐ (Fig. 3-4)

Все каталоги и инструкции здесь: https://splitsystema48.ru/instrukcii-po-ekspluatacii-kondicionerov.html

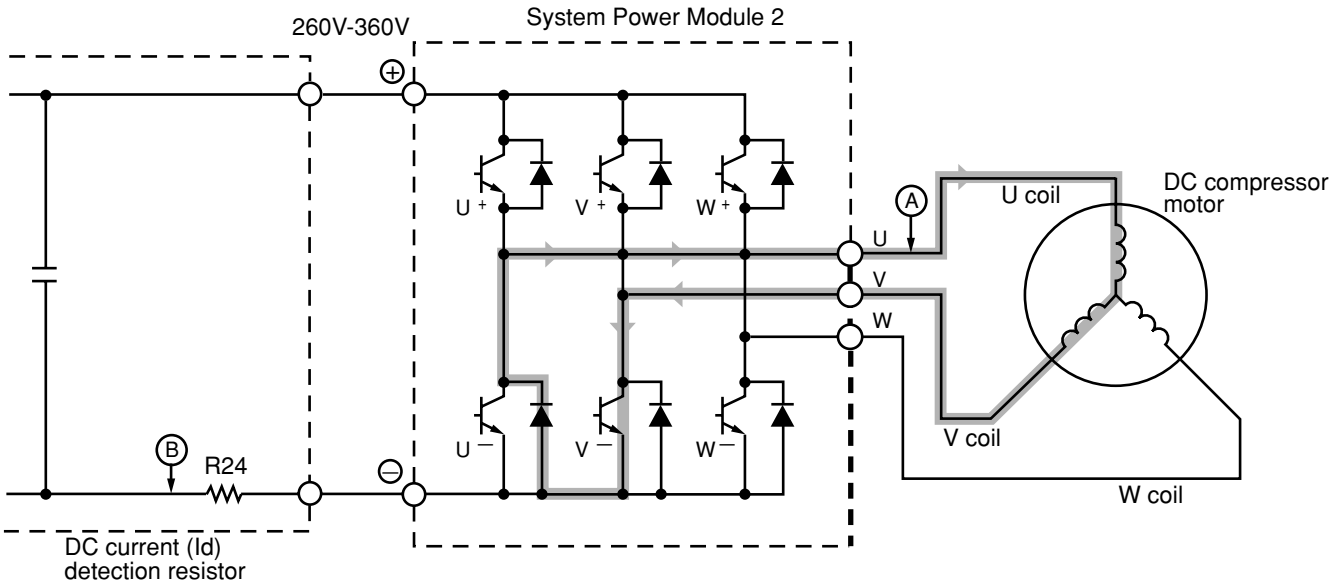

Fig. 3-4 Power module circuit (U^+ is ON, V^- is ON)

- Since current flows at point Ⓑ only when U+ transistor is ON, the current waveform at point Ⓑ becomes intermittent waveform as shown in Fig. 3-3. Since current at point Ⓑ is approximately proportional to the input current of the air conditioner, input current is controlled by using DC current (Id) detection resistor.

<Reference>

If power module is detective, self diagnosis lamps on the control P.W.B. may indicate as shown below:

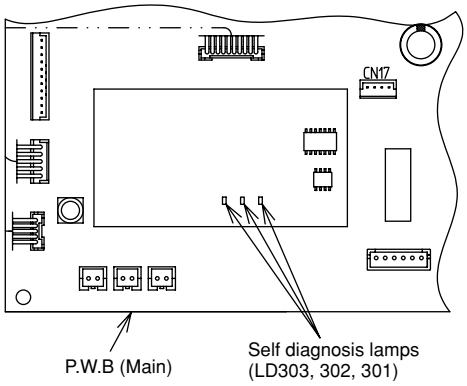

Fig. 3-5

Table 3-1

Self-diagnosis	Self-diagnosis lamp and mode	
Ip (peak current cut)	LD301	Blinks 2 times
Abnormal low speed rotation	LD301	Blinks 3 times
Switching incomplete	LD301	Blinks 4 times

- Simplified check of power module (Lighting mode when operated with compressor leads disconnected)
  (1) Disconnect connector of 3-pole (WHT, YEL, RED) lead wire connecting to compressor located at the lower part of electric parts box.
  (2) Set to compressor operation state (other than FAN mode) and press Start/stop switch of remote control.
  (3) If normal operation continues for more than 1 minute (LD303 lights), power module is considered normal.
  ❊ Refer to other item (troubleshooting on page 94) for independent checking of power module.

Все каталоги и инструкции здесь: https://splitsystema48.ru/instrukcii-po-ekspluatacii-kondicionerov.html

4. Power Circuit for P.W.B.

- Fig. 4-1 shows the power circuit for P.W.B. and waveform at each point.

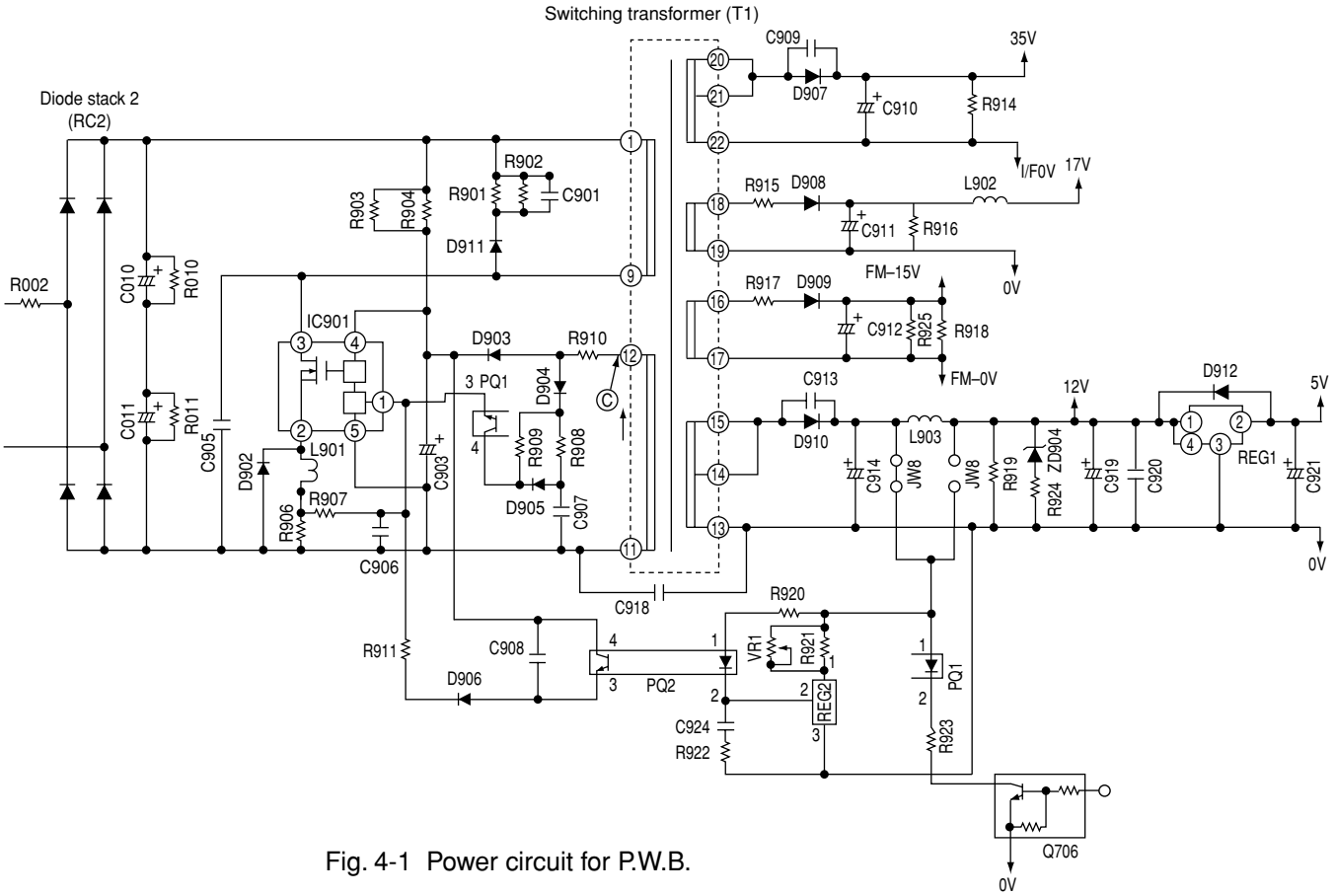

Fig. 4-1 Power circuit for P.W.B.

- In the power circuit for P.W.B., power supply for microcomputer, peripheral circuits, and system power module driver circuit and, as well as DC 35V, are produced by switching power circuit.
- Switching power circuit performs voltage conversion effectively by switching transistor IC901 to convert DC 330V voltage to high frequency of about 20kHz to 200kHz.
- Transistor IC901 operates as follows:

(1) Shifting from OFF to ON

- DC about 330V is applied from smoothing capacitors C010 ⊕ and C011 ⊖ in the control power circuit. With this power, current flows to pin ④ of IC901 via R903 and R904 and IC901 starts to tum ON. Since voltage in the direction of arrow generates at point Ⓒ at the same time, current passing through R910 and D903 is positive-fed back to IC901.

Все каталоги и инструкции здесь: https://splitsystema48.ru/instrukcii-po-ekspluatacii-kondicionerov.html

(2) During ON

- The drain current at IC901 increases linearly. During this period, the gate voltage and current become constant because of the saturation characteristics of the transformer.

(3) Shifting from ON to OFF

- This circuit applies a negative feedback signal from the 12V output. When the voltage across C919 reaches the specified value, REG2 turns on and current flows to PQ2 ①-②. This turns the secondary circuits on, sets IC901 pin ① to “Hi”, and turns IC901 off.

(4) During OFF

- While IC901 is on, the following energy charges the primary windings of the transformer:

  Energy=$LI^2/2$. Here, L : Primary inductance

  I : Current when IC1 is off

  This energy discharges to the secondary windings during power off. That is, C910, C911, C912, C914 is charged according to the turn ratio of each winding.
- At the start, an overcurrent flows to IC901 because of the charged current at C910, C911, C912, C914.
- The drain current at IC901 generates a voltage across R906. If it exceeds the IC901 base voltage, it sets the IC901 gate voltage to “HI”.
- R906 limits the gate voltage to prevent excessive collector current from flowing to IC901.

<Reference>

If the power circuit for P.W.B. seems to be faulty:

(1) Make sure that 5V and 12V on the control P.W.B., upper arm U, V and W, and the lower arm power voltage are the specified values.

(2) When only the 5V output is low:
REG 1 (regulator) faulty, 5V-0V shorted, output is too high, or REG 1 is abnormal.

(3) When 12V and 5V are abnormal:
The following defects can be considered:
① Fan, operation, power, rush prevention relay (shorting in relay, etc.)
② Microcomputer is abnormal.
③ REG 1 (regulator is abnormal), etc.
Shorting on primary circuits.
When shorting occurs in the secondary circuits, there is no abnormality in the primary circuits because of overcurrent protection.
The voltage rises when an opening occurs in the primary circuits, or the feedback system is abnormal.

(4) When 15V and 17V are abnormal:
D908, D909 or drive circuit is abnormal.

(5) When all voltage are abnormal:
IC901, R906, etc. are possibly abnormal.

* If IC901 is abnormal, be aware that other components, such as the power module, REG (regulator), etc. are possibly defective.

[When the switching power supply seems to be abnormal, the voltage between IC901 pin ④ (to be measured at the leads of R904 and R903) and IC901 pin ⑤ (to be measured at R906 lead) may be between 11 and 16V. This is because the protection circuit of IC901 is operating.]

Все каталоги и инструкции здесь: https://splitsystema48.ru/instrukcii-po-ekspluatacii-kondicionerov.html

5. Reversing valve control circuit

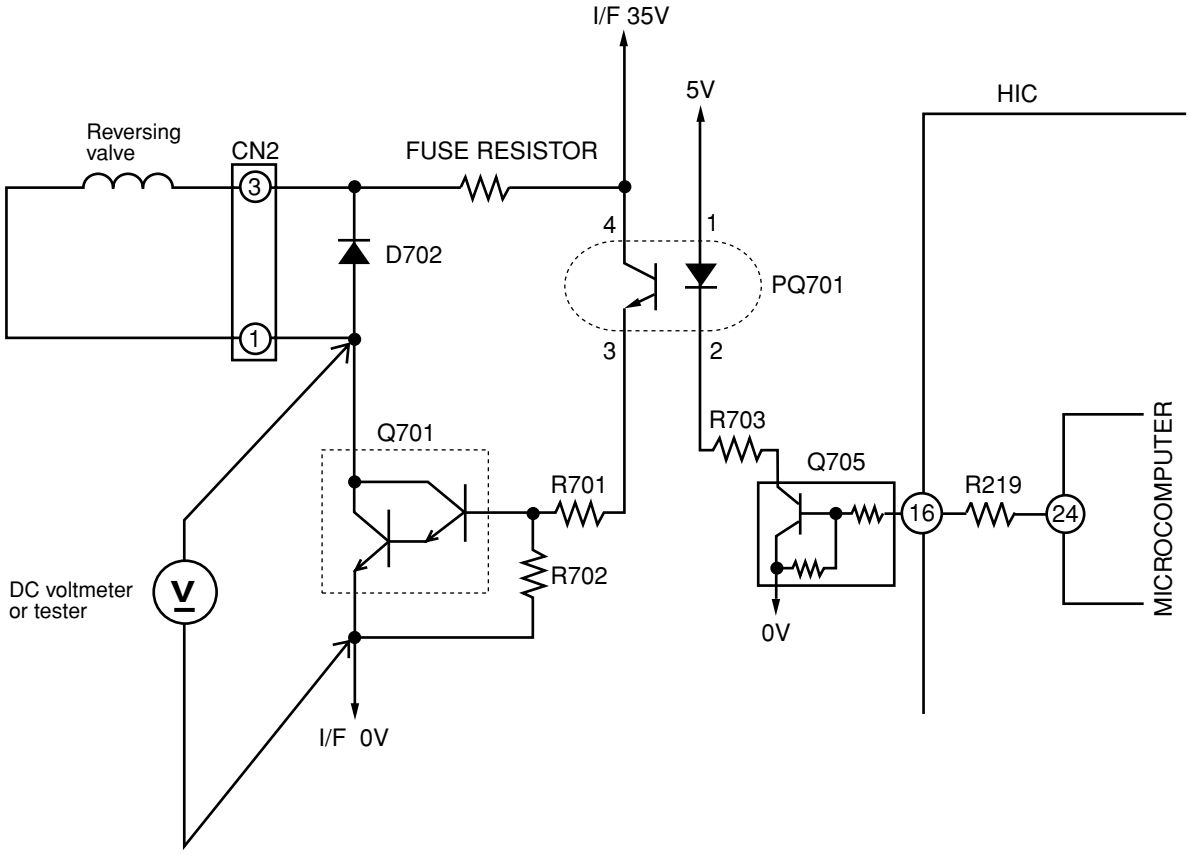

Fig. 5 – 1

- Reversing valve control circuit can switch reversing valve ON/OFF according to instruction from indoor microcomputer depending on the operation condition shows in Table 5-1.

  Voltage at each point in each operation condition is approximately as shown below when measured by tester. (When collector voltage of Q701 is measured)

Table 5-1

Operation condition		Collector voltage of Q701
Cooling	General operation of Cooling	About 35V
Heating	In normal heating operation	About 0.8V
	MAX. rotation speed instructed by indoor microcomputer after defrost is completed	About 0.8V
	Defrosting	About 35V
Dehumidifying	Sensor dry	About 35V

Все каталоги и инструкции здесь: https://splitsystema48.ru/instrukcii-po-ekspluatacii-kondicionerov.html

6. Rotor magnetic pole position detection circuit

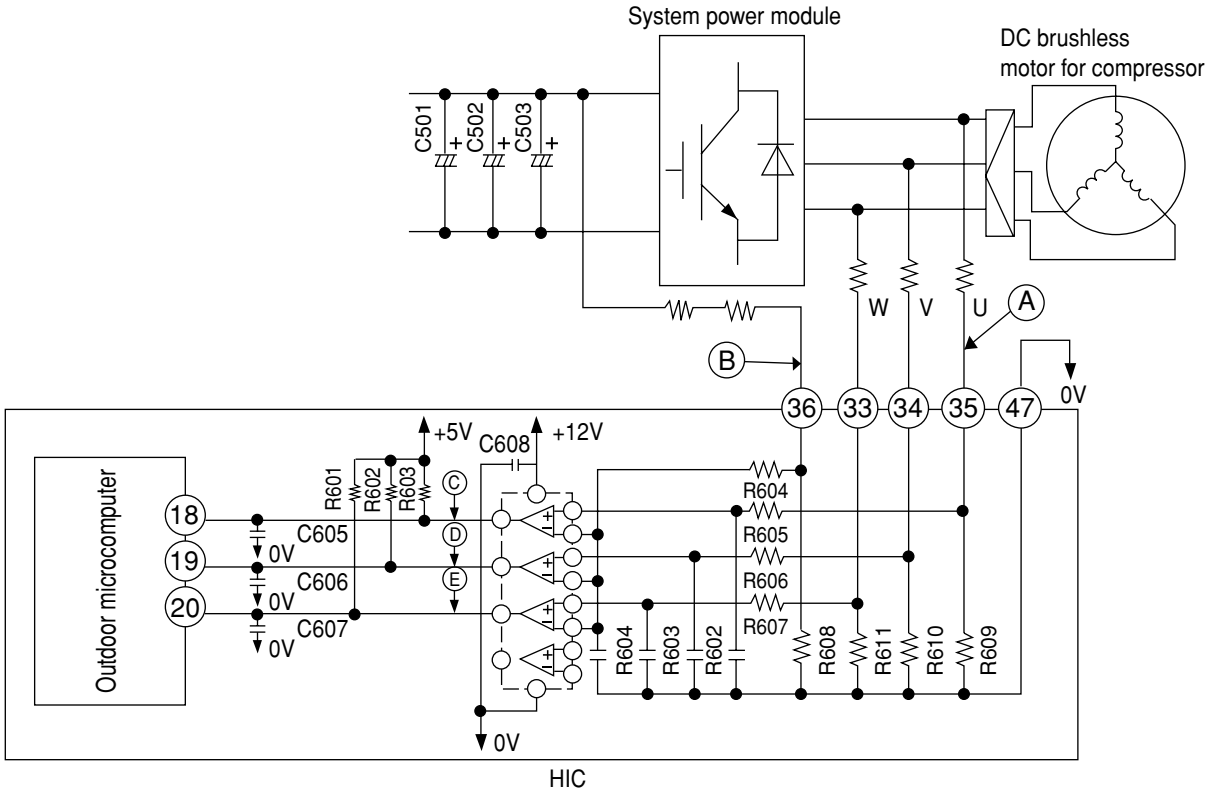

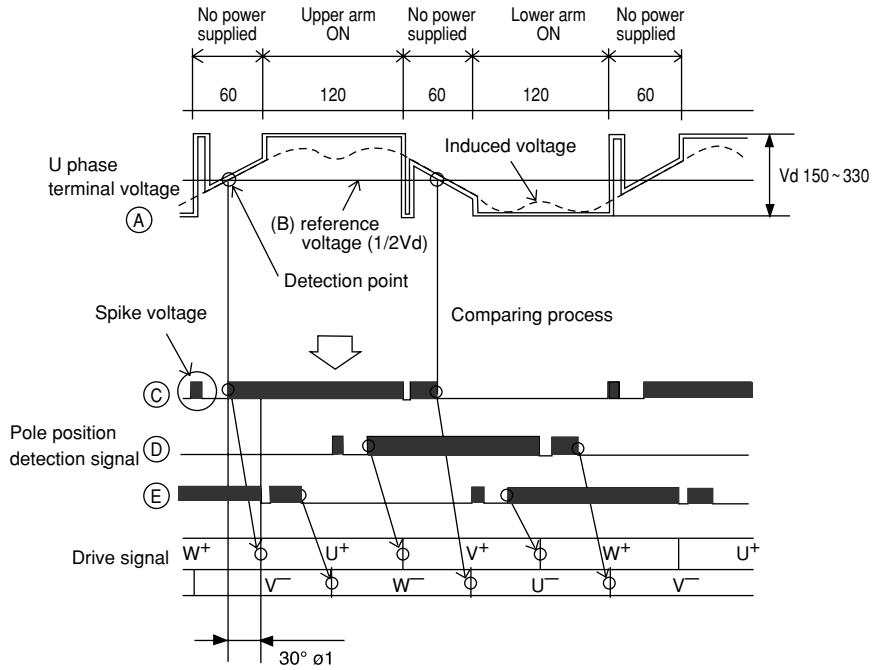

Fig. 6-1 Rotor magnetic pole position detection circuit and voltage waveform at each point

- To detect U phase, voltage at point Ⓒ is produced by driving motor induced voltage signal (voltage at point Ⓐ) and 1/2 voltage of Vd (voltage at point Ⓑ), and comparing with comparator.
- For V phase and W phase, voltage at point Ⓓ and voltage at point Ⓔ are produced in the same way as above. Voltage at point Ⓒ is taken into indoor unit microcomputer, switching timing to U^+ transistor from W^+ transistor is produced by delaying 30° from rise waveform, ignoring spike voltage. In addition, switching timing to U-transistor from W-transistor is produced by delaying 30° from fall waveform.
- For V phase and W phase, in the same way as above, drive signals are produced from voltages at point Ⓓ and point Ⓔ. Phases are shifted by 120° and 240°, respectively, comparing with U phase.

Все каталоги и инструкции здесь: https://splitsystema48.ru/instrukcii-po-ekspluatacii-kondicionerov.html

7. Drive Circuit

Fig. 7-1 shows the drive circuit.
The circuits for U phase, V phase and W phase have the same Configuration.

- In low speed rotation mode (PWM range), as shown in Fig. 7-2, 0-5V chopper signal is ouput from microcomputer for each phase. Signal output from microcomputer is ouput to IC1 and is inverted by active Lo to become 0-15V chopper signal; it is then drive the transistor of each phase.
- In high speed rotation mode (PWM range), as shown in Fig. 7-3, 0-5V drive signal is ouput from microcomputer for each phase (with no chopper because of full duty). Signal output from microcomputer is input to IC1 and is inverted by active Lo to become 0-15V drive signal; it is then drive the transistor of each phase.

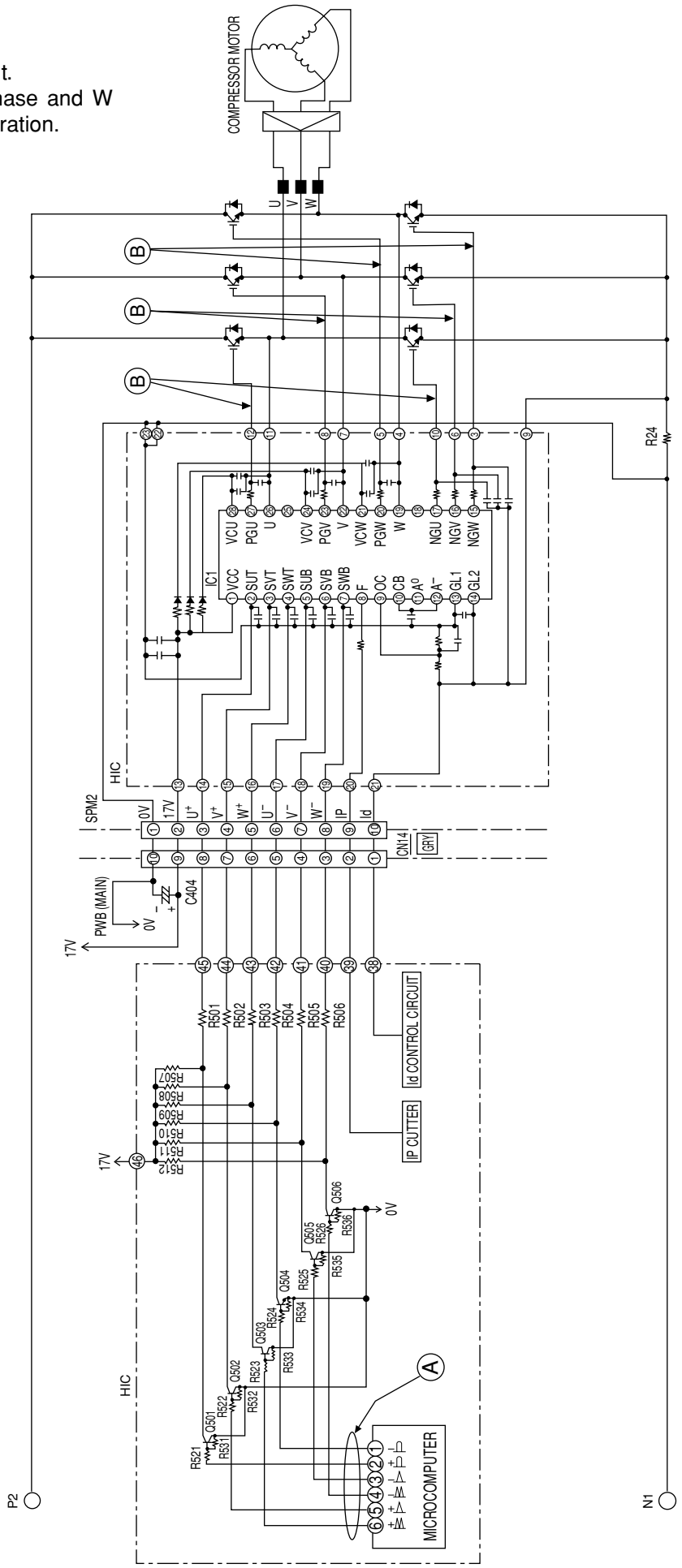

Fig.. 7-1

Все каталоги и инструкции здесь: https://splitsystema48.ru/instrukcii-po-ekspluatacii-kondicionerov.html

[Low speed rotation mode]

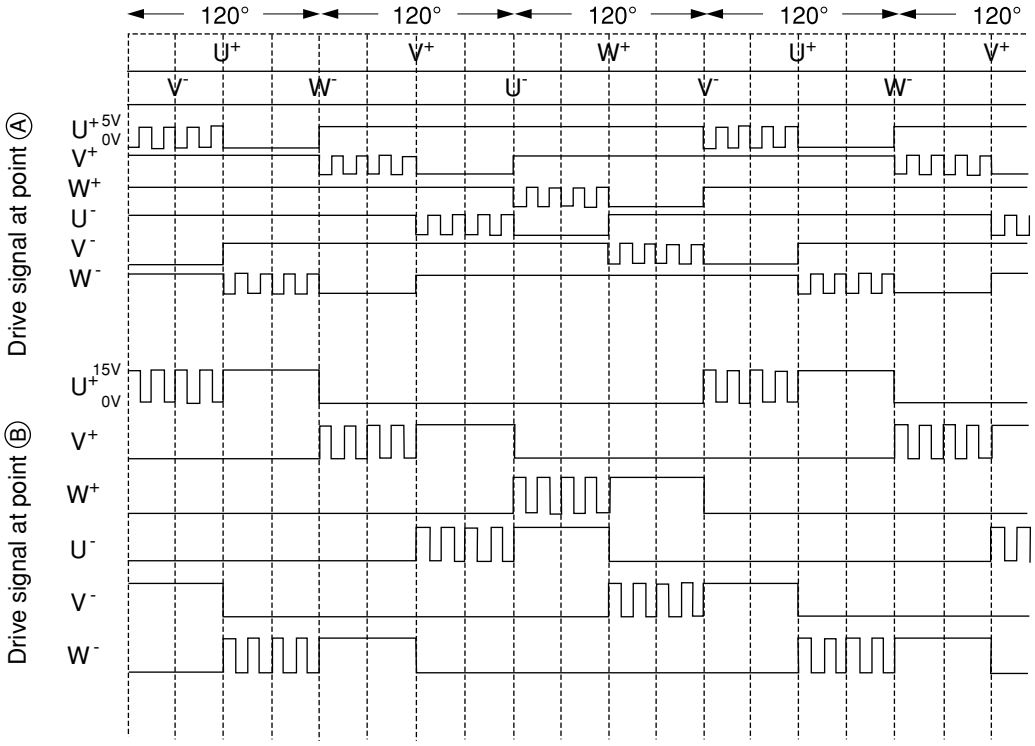

Fig. 7-2

[High speed rotation mode]

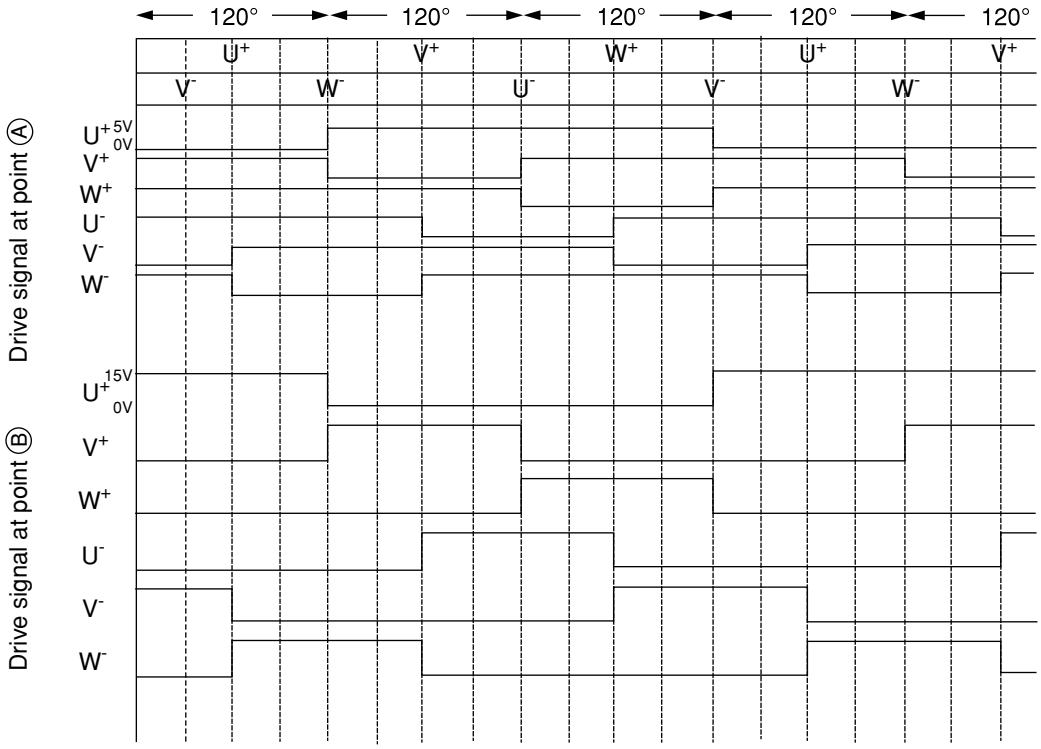

Fig. 7-3

Все каталоги и инструкции здесь: https://splitsystema48.ru/instrukcii-po-ekspluatacii-kondicionerov.html

8. HIC and Peripheral Circuits

- Fig. 8-1 shows the micro computer and its peripheral circuits, Table 8-1, the basic operations of each circuit block, and Fig. 8-2, the system configuration.

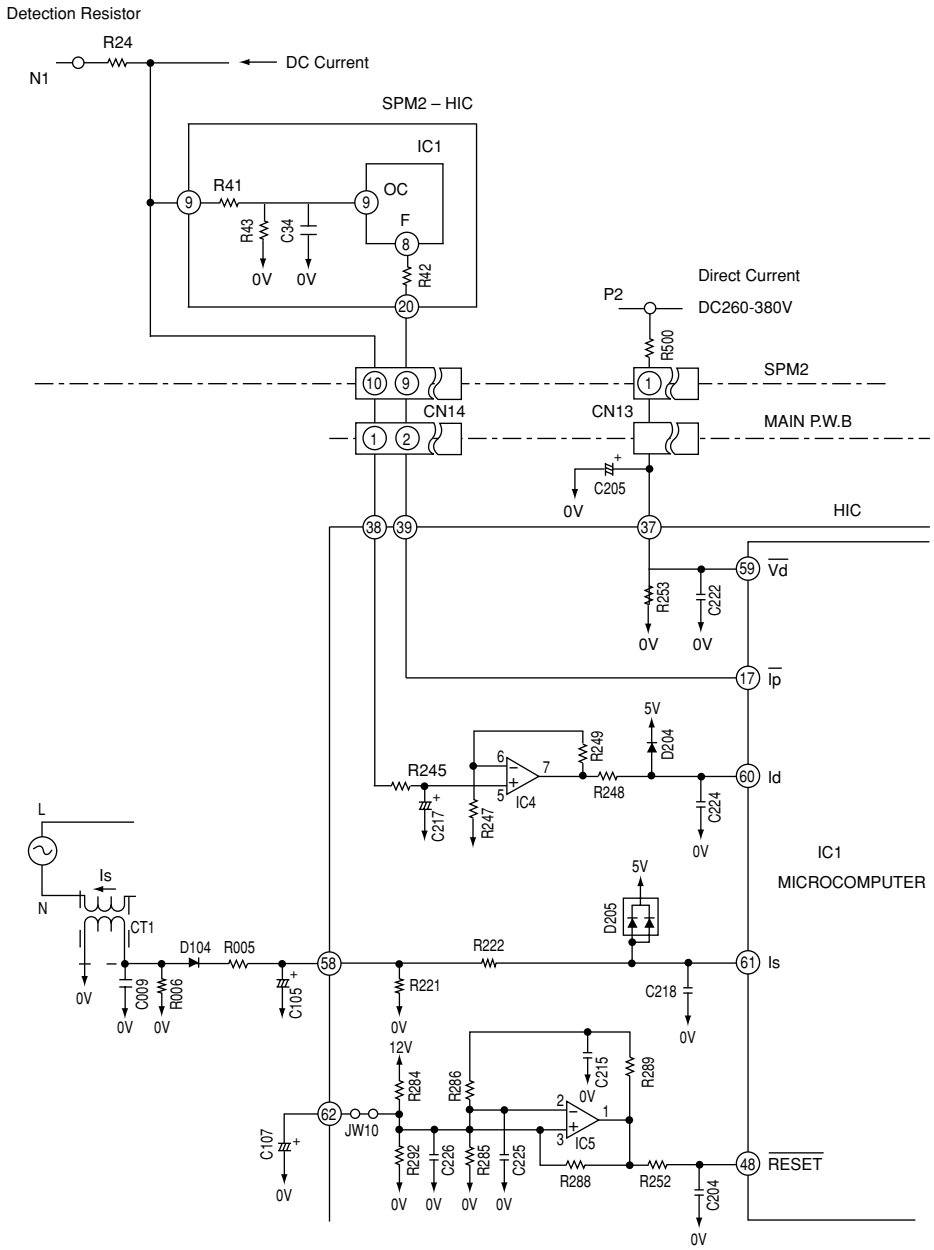

Fig. 8-1 Microcomputer and Peripheral Circuits

Table 8-1

Circuit block	Basic operation
Peak current cutoff circuit	Detects DC current flowing power module and during overcurrent (instantaneous value) flows, stops upper/lower arm drive circuits and also produces Ip signal by which drive signal output is stopped.
Set value circuit	Compares voltage detected, amplified and input to HIC with set voltage value in microcomputer, and controls overload when set value exceeds input voltage.
Voltage amplifier circuit	Voltage-amplifies DC current level detected by the detection resistor and inputs this to microcomputer. Internal or external overload is judged in microcomputer.
Reset circuit	Produces reset voltage.
Trip signal synthesis circuit	Modulates chopper signal to drive signal and stops according to presence/absence of Ip signal or reset signal.

Все каталоги и инструкции здесь: https://splitsystema48.ru/instrukcii-po-ekspluatacii-kondicionerov.html

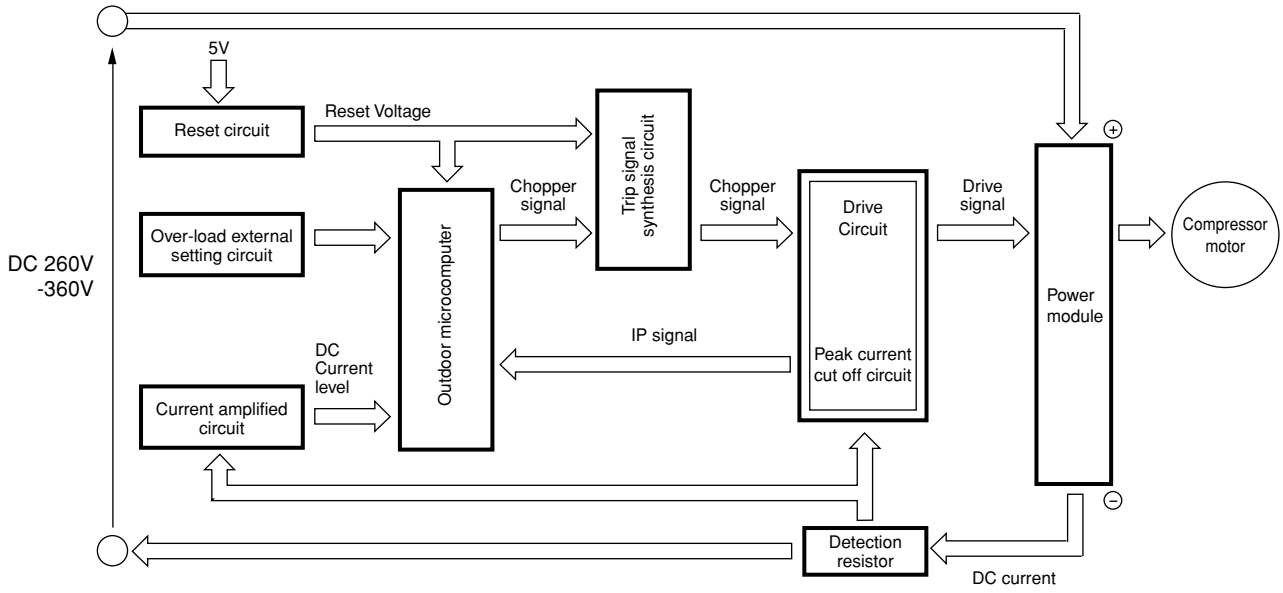

Fig. 8-2

- The following describes the operations of each circuit in detail.

  (1) Peak current cut off circuit
  Fig.8-3 Peak Current Cut off Circuit and Waveforms at Each Section.

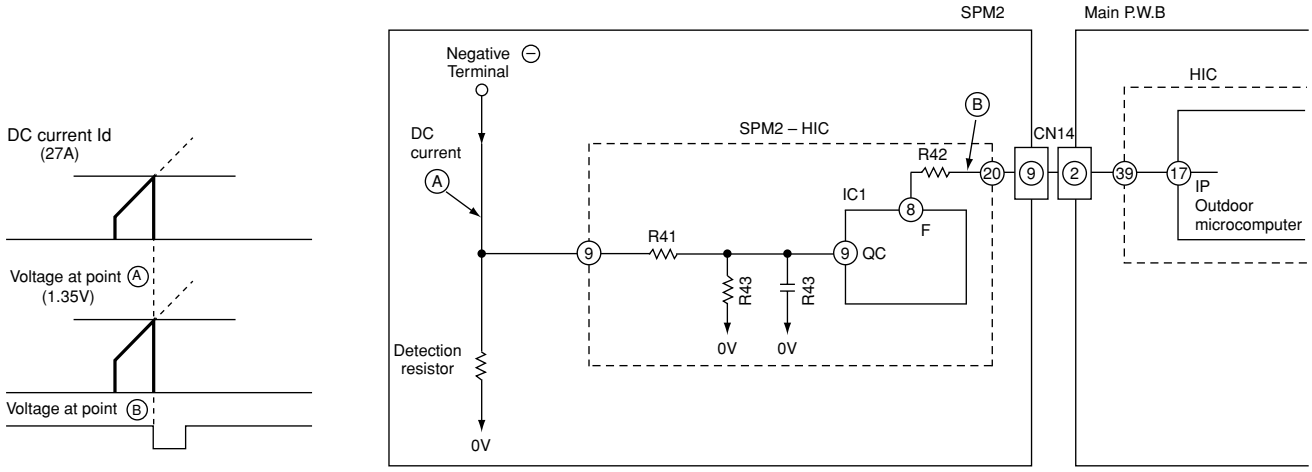

Fig.8-3

- The Ip cut off circuit detects an instantaneous excessive current and stops inverter to protect parts such as SPM2, etc.
- As shown in diagram, if current exceeding 27A flows, voltage at point Ⓐ recognized by detecting resistor is input to pin ⑩ of SPM2 – HIC, and voltage divided by R41 and R43 is input to pin ⑨ of IC1. Since threshold of IC1 is exceeded in this case, Lo signal is input from pin ⑧ (Voltage at point Ⓑ . When Lo signal is input to pin ⑰ of microcomputer, microcomputer stops drive output.
- When drive output from microcomputer is stopped, all drive output goes Hi, and microcomputer is initialized to enter drive signal standby mode. 3 minutes later, microcomputer outputs drive signal again, to start operation.

Все каталоги и инструкции здесь: https://splitsystema48.ru/instrukcii-po-ekspluatacii-kondicionerov.html

(2) Overload control circuit (OVL control circuit)

- Overload control is to decrease the speed of the compressor and reduce the load when the load on the air conditioner increases to an overload state, in order to protect the compressor, electronic components and power breaker.
- Overloads are judged by comparing the DC current level and set value.
- Fig. 8-4 shows the overload control system configuration and Fig. 8-5 is a characteristic diagram of overload judgement values. There are two judgement methods-external judgement which compares the externally set value with the DC current value regardless of the rotation speed and internal judgement which compares the set value that varies according to the rotation speed programmed in the microcomputer software with the DC current value.

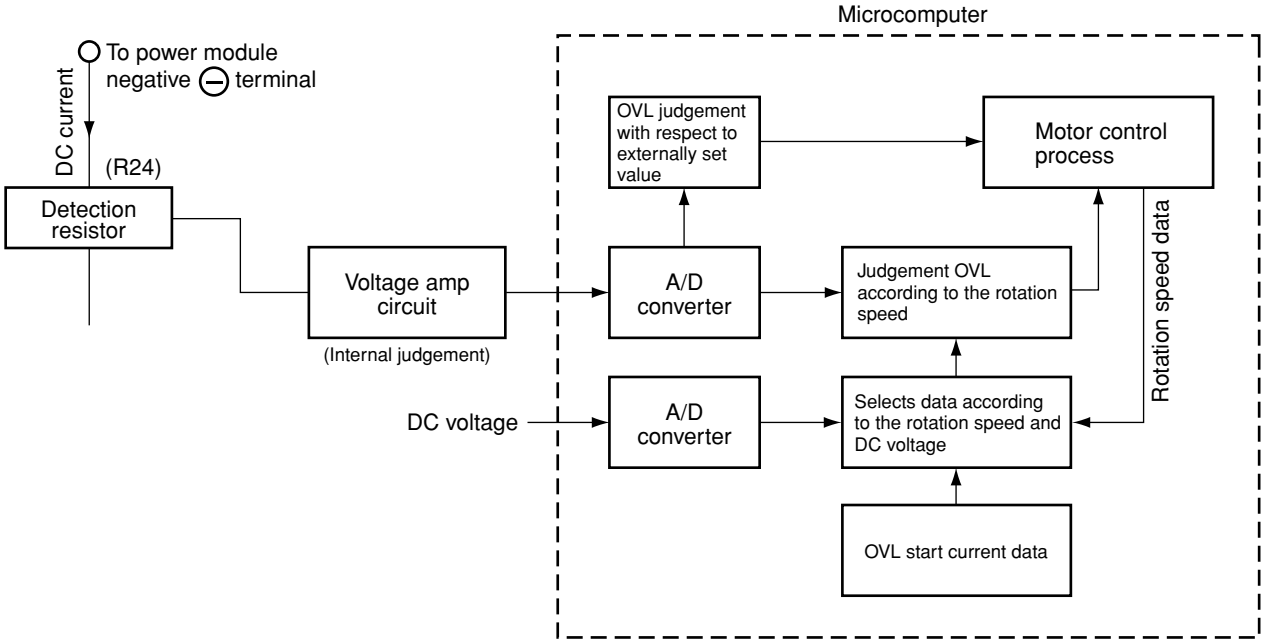

Fig. 8-4 Overload Control System Configuration

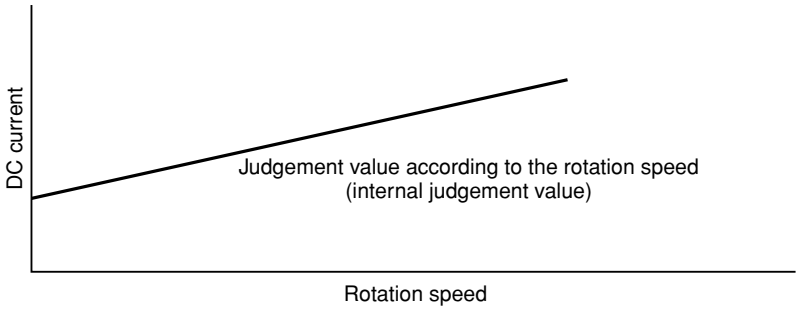

Fig. 8-5

①. Overload external judgement circuit

- Fig. 8-1. The filter consisting of R245 and C217 removes high harmonic components from the voltage generated by the current flowing to Detection resistor; R245 and C217 average the voltage. This voltage is then input to IC4 pin ⑤ is then amplified and supplied to microcomputer pin ⑥⓪. The microcomputer compares this input with the internally set value, and if the input exceeds the set value, it enters overload control status.
- Fig. 8-7 shows the rotation speed control. When the voltage at pin ⑥⓪ of the microcomputer exceeds the set value, the microcomputer decreases the rotation speed of the compressor and reduces the load regardless of the rotation speed commanded by the indoor microcomputer.

Все каталоги и инструкции здесь: https://splitsystema48.ru/instrukcii-po-ekspluatacii-kondicionerov.html

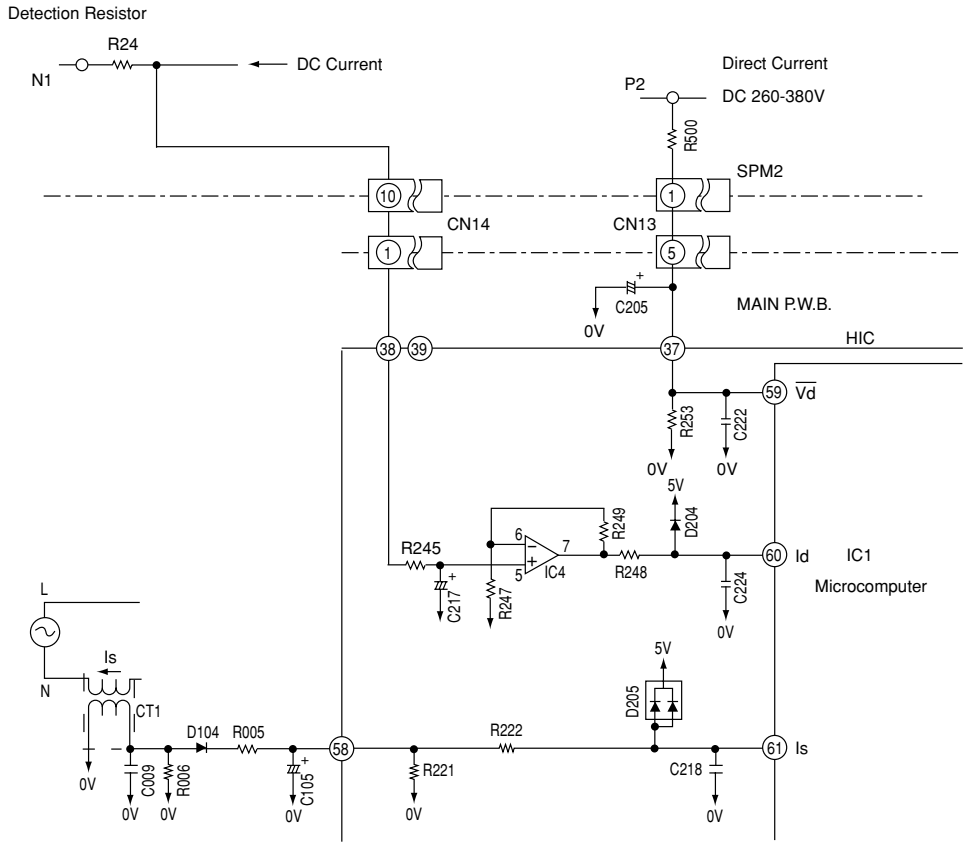

Fig. 8-6

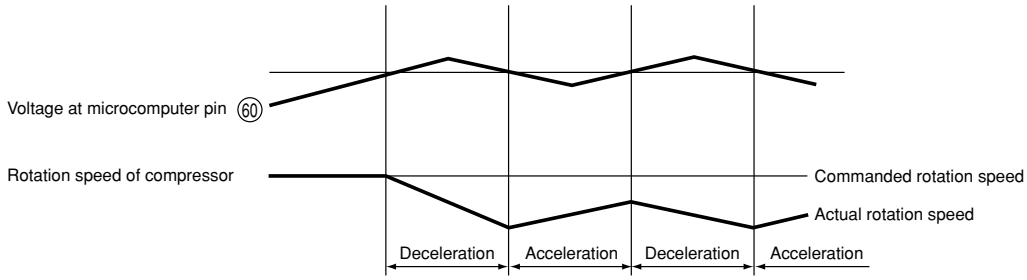

Fig. 8-7

②. Voltage amp. circuit

- The voltage amp. circuit amplifies the DC current level detected by the detection resistor after being converted to a voltage and supplies it to the microcomputer. Receiving this, the microcomputer converts it to a digital signal and compares it with the internal data to judge whether or not overload control is required.

< During overload control >

- The filter consisting of R245 and C217 removes high harmonic components from the voltage generated from the DC current flowing to the detection resistor, and supplies it to IC4 pin ⑤ IC4 forms a non-inverting voltage amp. circuit together with the peripheral elements.
- The microcomputer stores the set values which vary according to the rotation speed. When the DC current level exceeds the set value, the microcomputer enters the overload control state.
- The set Value is determined by the amplification of the voltage amp. circuit.

{ ● Amplification : high → DC current : low
{ ● Amplification : low → DC current: high

Все каталоги и инструкции здесь: https://splitsystema48.ru/instrukcii-po-ekspluatacii-kondicionerov.html

- R500, R253, detect the DC voltage at the power circuit. The microcomputer receives a DC voltage (260-380V) via HIC ㊲ and applies correction to the overload set value so the DC current is low (high) when the DC voltage is high (low).

  (Since the load level is indicated by the DC voltage multiplied by DC current, R247, R248, R249 are provided to perform the same overload judgement even when the voltage varies.)

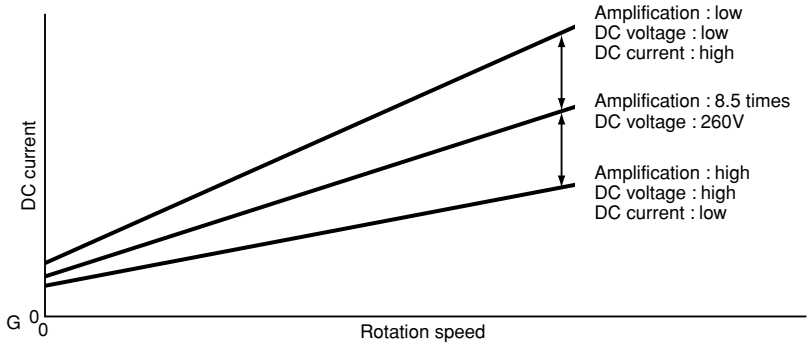

Fig. 8-8

< During start current control >

- It is required to maintain the start current (DC current) constant to smooth the start of the DC motor for the compressor.
- It is software to control the start current.
- The start current varies when the supply voltage varies. This control method copes with variations in the voltages as follows.

  (1) Turns on the power module's U^+ and V^- transistors so the current flows to the motor windings as shown in Fig8-9.

  (2) Varies the turn-ON time of the W^+ transistor according to the DC voltage level and the start is controlled so the start current is approx. 10A as shown in Fig. 8-10.

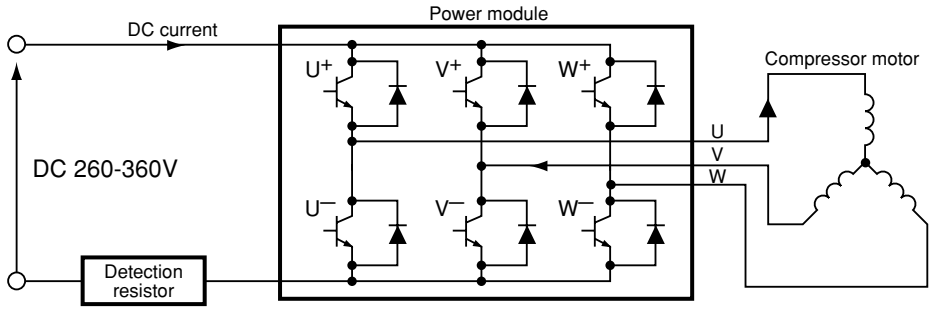

Fig. 8-9

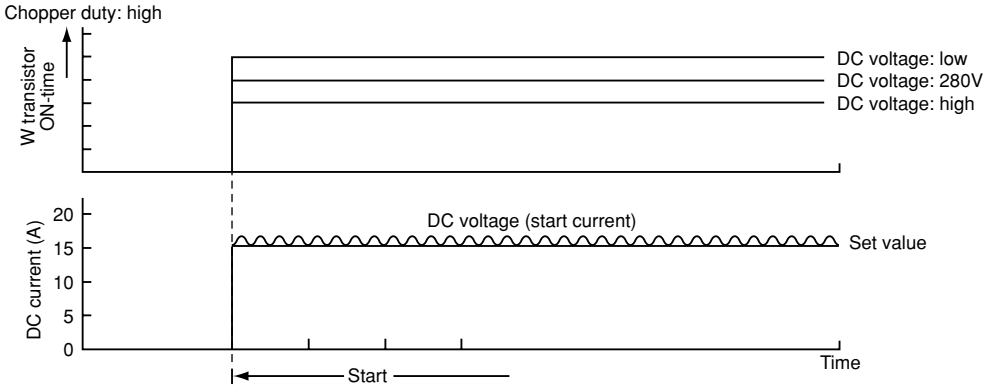

Fig. 8-10

Все каталоги и инструкции здесь: https://splitsystema48.ru/instrukcii-po-ekspluatacii-kondicionerov.html

9. Temperature Detection Circuit

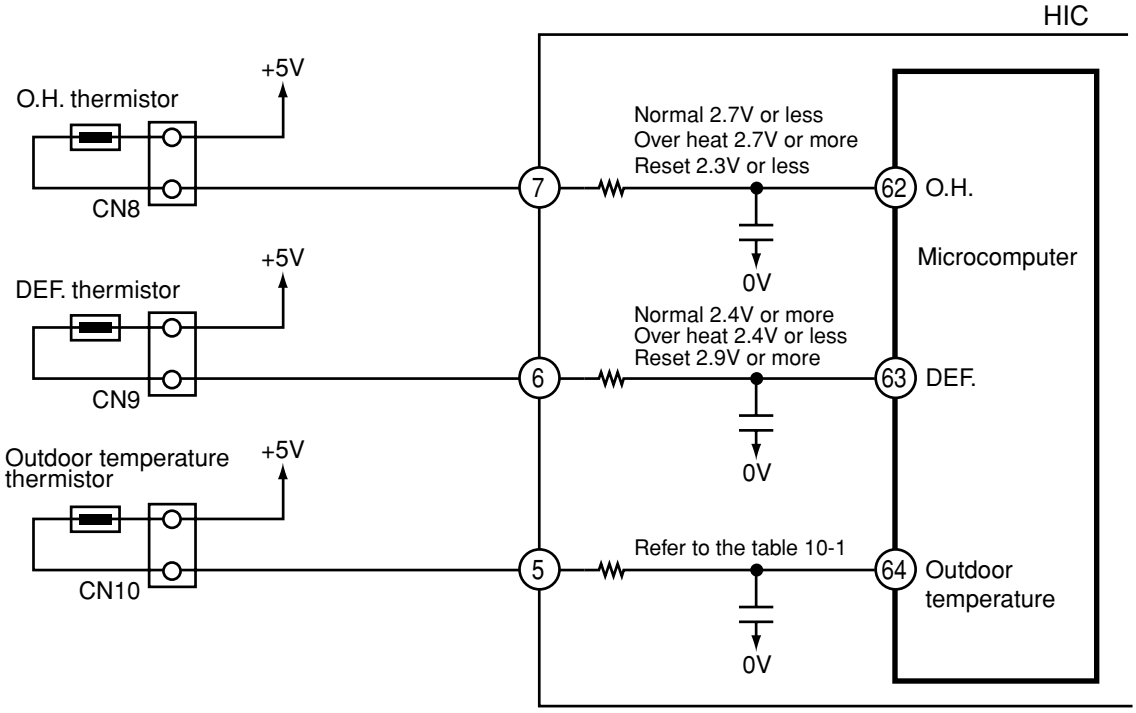

Fig. 9-1

- The Over heat thermistor circuit detects the temperature at the surface of the compressor head, the Defrost. thermistor circuit detects the defrosting operation temperature.
- A thermistor is a negative resistor element which has the characteristics that the higher (lower) the temperature, the lower (higher) the resistance.
- When the compressor is heated, the resistance of the Over heat thermistor becomes low and voltage at pin ⑥② of microcomputer is increased.
- Microcomputer compares the voltage present at pin ⑥② with the internal set value, if it is exceeded the set value microcomputer judges that the compressor is overheated and stops operation.
- When frost forms on the outdoor heat exchanger, the temperature at the exchanger drops abruptly. Therefore the resistance of the Defrost. thermistor becomes high and the voltage at pin ⑥③ of microcomputer drops.
  If this voltage becomes lower than the set value stored inside, the microcomputer starts defrosting control.
- During defrosting operation the microcomputer transfers the defrosting condition command to the indoor microcomputer via the circuit interface.
- The microcomputer always reads the outdoor temperature via a thermistor (microcomputer pin ⑥④), and transfers it to the indoor unit, thus controlling the compressor rotation speed according to the value set at the EEPROM in the indoor unit, and switching the operation status (outdoor fan on/off, etc.) in the dry mode.

  The following shows the typical values of outdoor temperature in relation to the voltage:

Table 9-1

Outdoor temperature (°C)	-10	0	10	20	30	40
Microcomputer pin ⑤ voltage (V)	1.19	1.69	2.23	2.75	3.22	3.62

<Reference>

When the thermistor is open, in open status, or is disconnected, microcomputer pins ⑥②–⑥④ are approx. 0V; when the thermistor is shorted, they are approx. 5 V, and LD301 blinks seven times.

However, an error is detected only when the OH thermistor is shorted; in such a case, the blinking mode is entered 12 minutes after the compressor starts operation.

Все каталоги и инструкции здесь: https://splitsystema48.ru/instrukcii-po-ekspluatacii-kondicionerov.html

10. Reset Circuit

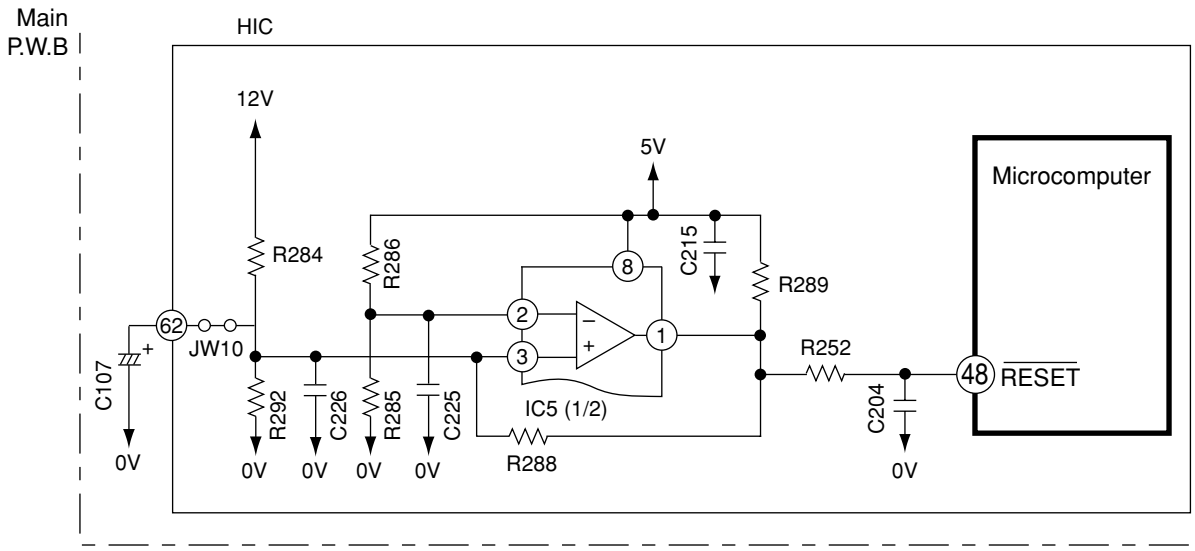

Fig. 10-1

- The reset circuit initializes the microcomputer program when Power is “ON” or “OFF”.
- Low voltage at pin ㊽ resets the microcomputer, and HI activates the microcomputer.
- Fig. 10-1 shows the reset circuit and Fig. 10-2 shows waveform at each point when power is turned on and off.
- When power is turned on, 12V line and 5V line voltages rise and 12V line voltage reaches 10.9V and reset voltage input to pin ㊽ of microcomputer is set to Hi.
- Reset voltage will be hold “Hi” until the 12V line voltage drops to 9.90V even though the power shuts down.

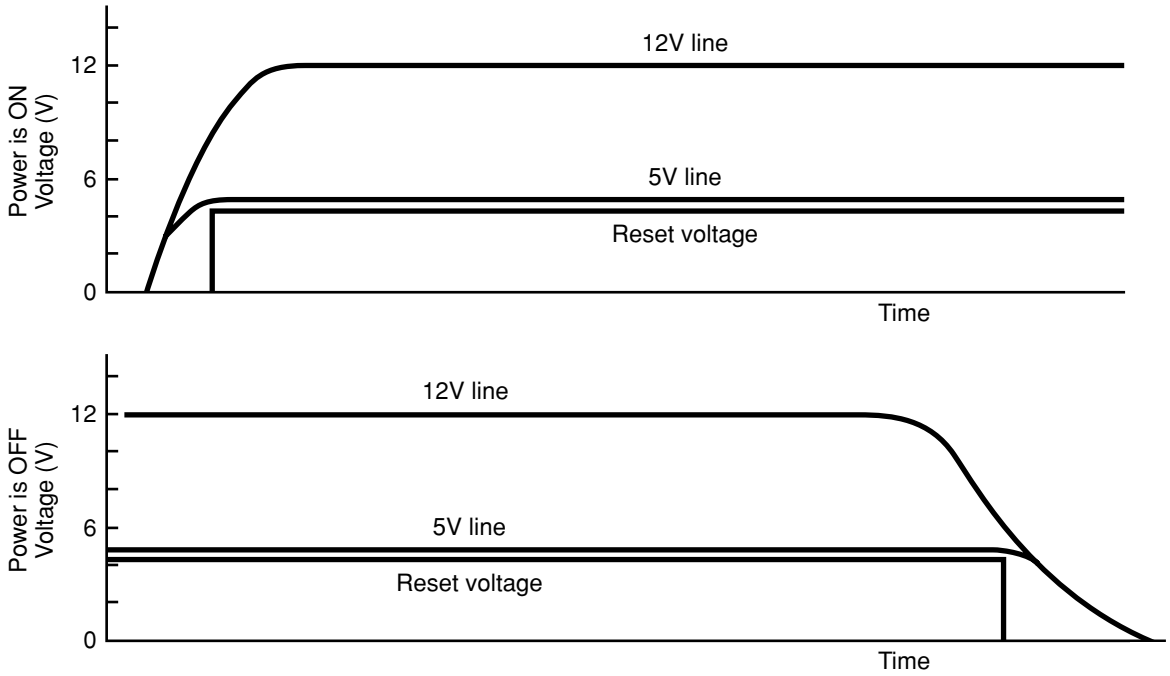

Fig. 10-2

Все каталоги и инструкции здесь: https://splitsystema48.ru/instrukcii-po-ekspluatacii-kondicionerov.html

11. Outdoor DC Fan Motor control circuit.

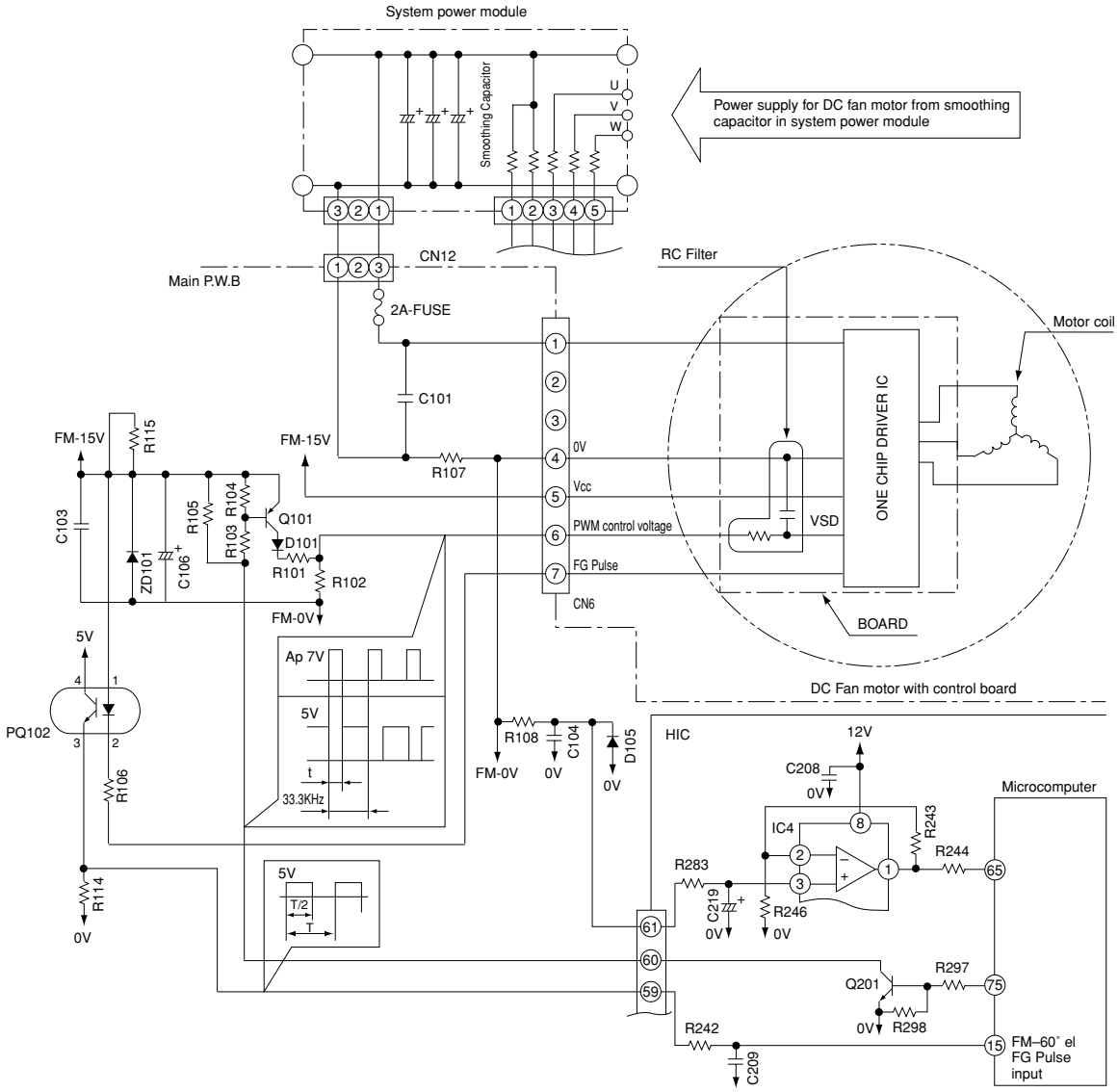

Fig. 11-1

- This model uses DC Fan Motor which has a controller circuit in the Motor.
- This DC Fan Motor will rotate by control voltage apply to Vsp input. (Voltage range: 1.7 to 7V DC)
  Vsp high : Faster ; Vsp low : slower ; Vsp lower than 1.7V : stop
- Motor will output FG pulse by following this motor revolution.
- Outdoor Microprocessor will output PWM control signal from FMCHOP terminal by following the instruction from indoor Microprocessor.
- This PWM control signal will convert to Vsp voltage by smoothing circuit (Q101 & RC filter)
- Fan motor will start to rotate when Vsp was proceeding over than 1.7V, and generate FG pulse by rotation speed.
- FG pulse will feed back to Outdoor Microprocessor through PQ102.
- PQ102 is the isolator between Microprocessor circuit and DC Fan Motor circuit, which has to match the Fan Motor revolution with instructed revolution. Such as...
  FG feedback: Faster – Instruction: Slower ... Decrease pulse width
  FG feedback: Slower – Instruction: Faster ... Increase pulse width
- FG pulse is also used for Fan Motor failure detection
- Microprocessor will monitor FG pulse 30 seconds after start the fan motor. If there is no signal detected, it will consider that the Fan Motor was malfunction and stop the operation. In this case, LD302 on control PWB will blink 12 times. (Fan Motor lock detected)
- R107 and IC4 are used for Fan Motor over current

Все каталоги и инструкции здесь: https://splitsystema48.ru/instrukcii-po-ekspluatacii-kondicionerov.html

< Reference >

- When operation stop with LD301 blinks 12 times, it may be caused by faulty DC fan motor.
- In this case, please check CN6 and CN12 connection first. It makes Fan Motor Lock also if those connectors are in misconnection.
- DC Fan Motor has broken when 2A Fuse was burned. Please replace both DC Fan Motor and 2A Fuse together.
- It will makes “Fan Lock Stop”when something has disturb the Fan rotation by inserting materials into propeller fan or ice has growing inside of outdoor unit by snowing.
- It may make “Fan Lock Stop” by strong wind (ex. 17m/sec or above) against the Fan rotation. In this case, unit will be restart again after a while.
- In case of “Fan Lock Stop” even though the DC Fan Motor is rotating correctly, the possible casue is Fan Motor problem or PQ102 on board or control board problem. Stop after the Fan motor runs 2 minutes, Fan Motor may be broken.

< Caution >

- Please take care for the electrical shock by high voltage of DC Fan Motor power source which is common with compressor when you are servicing this unit.
- You can not confirm the coil and wiring of Motor due to the built in control circuit in Fan Motor.

Все каталоги и инструкции здесь: https://splitsystema48.ru/instrukcii-po-ekspluatacii-kondicionerov.html

12. Power Factor Control Circuit

Power factor is controlled to almost 100%. (Effective use of power)

With IC in ACT module, control is performed so that input current waveform will be similar to waveform of input voltage

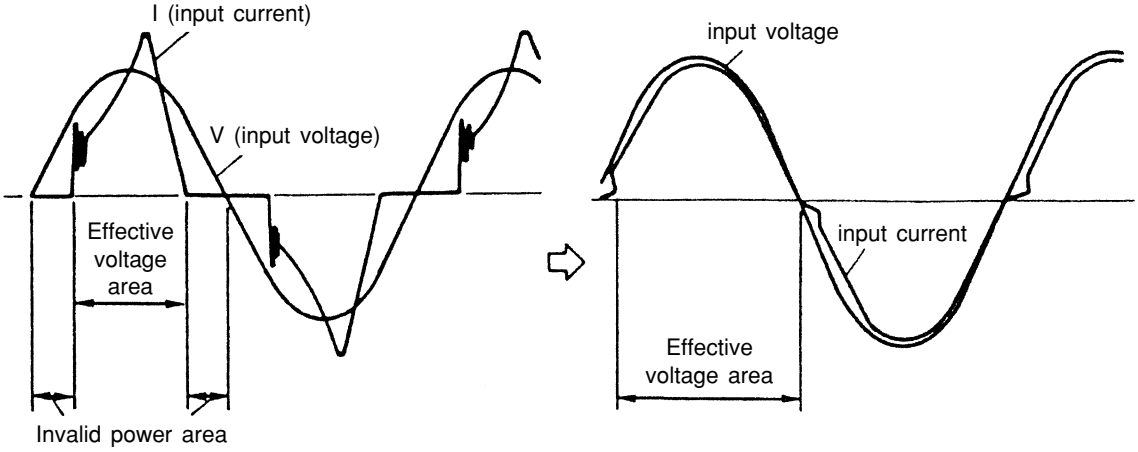

(Even if voltage is applied. current does not flow)

* Assuming the same current capacity (20A), power can be used about 10% effective, comparing with curent use (power factor of 90%), and maximum capacity is thereby improved.

Все каталоги и инструкции здесь: https://splitsystema48.ru/instrukcii-po-ekspluatacii-kondicionerov.html

SERVICE CALL Q & A

COOLING MODE

Q1 The compressor has stopped suddenly during cooling operation.

A1 Check if the indoor heat exchanger is frosted. Wait for 3-4 minutes until it is defrosted.

If the air conditioner operates in cooling mode when it is cold, the evaporator may get frosted.

DEHUMIDIFYING MODE

Q2 Sound of running water is heard from indoor unit during dehumidifying.

A2 Normal sound when refrigerant flows in pipe.

Q3 Compressor occasionally does not operate during dehumidifying.

A3 Compressor may not operate when room temperature is 10°C or less. It also stops when the humidity is preset humidity or less.

HEATING MODE

Q4 The circulation stops occasionally during Heating mode.

A4 It occurs during defrosting. Wait for 5-10 minutes until the condenser is defrosted.

Q5 When the fan speed is set at HIGH or MED, the flow is actually Weak.

A5 At the beginning of heating, the fan speed remains LOW for 30 seconds. If HIGH is selected, it switches to LOW and again to MED after additional 30 seconds.

Q6 Heating operation stops while the temperature is preset at "30".

A6 If temperature is high in the outdoor, heating operation may stop to protect internal devices.

Все каталоги и инструкции здесь: https://splitsystema48.ru/instrukcii-po-ekspluatacii-kondicionerov.html

AUTO FRESH DEFROSTING

Q7 After the ON/OFF button is pressed to stop heating, the outdoor unit is still working with the OPERATION lamp lighting.

A7 Auto Fresh Defrosting is carried out : the system checks the outdoor heat exchanger and defrosts it as necessary before stopping operation.

AUTO OPERATION

Q8 Fan speed does not change when fan speed selector is changed during auto operation.

A8 At this point fan speed is automatic.

NICE TEMPERATURE RESERVATION

Q9 When on-timer has been programmed, operation starts before the preset time has been reached.

A9 This is because “Nice temperature reservation” function is operating. This function starts operation earlier so the preset temperature is reached at the preset time. Operation may start maximum 60 minutes before the preset time.

Q10 Does “Nice temperature reservation” function operate during dehumidifying?

A10 It does not work. It works only during cooling and heating.

Q11 Even if the same time is preset, the operation start time varies.

A11 This is because “Nice temperature reservation” function is operating. The start time varies according to the load of room. Since load varies greatly during heating, the operation start time is corrected, so it will vary each day.

INFRARED REMOTE CONTROL

Q12 Timer cannot be set.

A12 Has the clock been set? Timer cannot be set unless the clock has been set.

Q13 The current time display disappears soon.

A13 The current time disappears in approx. 10 seconds. The time set display has priority.

When the current time is set the display flashes for approx 3 minutes.

Q14 The timer has been programmed, but the preset time disappears.

A14 Is the current time past the preset time? When the preset time reaches the current time, it disappears.

Все каталоги и инструкции здесь: https://splitsystema48.ru/instrukcii-po-ekspluatacii-kondicionerov.html

OTHERS

Q15 The indoor fan varies among high air flow, low air flow and breeze in the auto fan speed mode. (Heating operation)

A15 This is because the cool wind prevention function is operating, and does not indicate a fault.

The heat exchanger temperature is sensed in the auto speed mode. When the temperature is low, the fan speed varies among high air flow, low air flow and breeze.

Q16 Loud noise from the outdoor unit is heard when operation is started.

A16 When operation is started, the compressor rotation speed goes to maximum to increase the heating or cooling capability, so noise becomes slightly louder. This does not indicate a fault.

Q17 Noise from the outdoor unit occasionally changes.

A17 The compressor rotation speed changes according to the difference between the thermostat set temperature and room temperature. This does not indicate a fault.

Q18 There is a difference between the set temperature and room temperature.

A18 There may be a difference between the set temperature and room temperature because of construction of room, air current, etc. Set the temperature at a comfortable for the space.

Q19 Air does not flow immediately after operation is started.

A19 Preliminary operation is performed for one minute when the power switch on and heating or dehumidifying is set. The operation lamp blinks during this time for heating. This does not indicate a fault.

Все каталоги и инструкции здесь: https://splitsystema48.ru/instrukcii-po-ekspluatacii-kondicionerov.html

PRECAUTIONS FOR CHECKING

DANGER

1. Remember that the 0V line is biased to 155-170V in reference to the ground level.
2. Also note that it takes about 10 minutes until the voltage fall after the power switch is turned off.

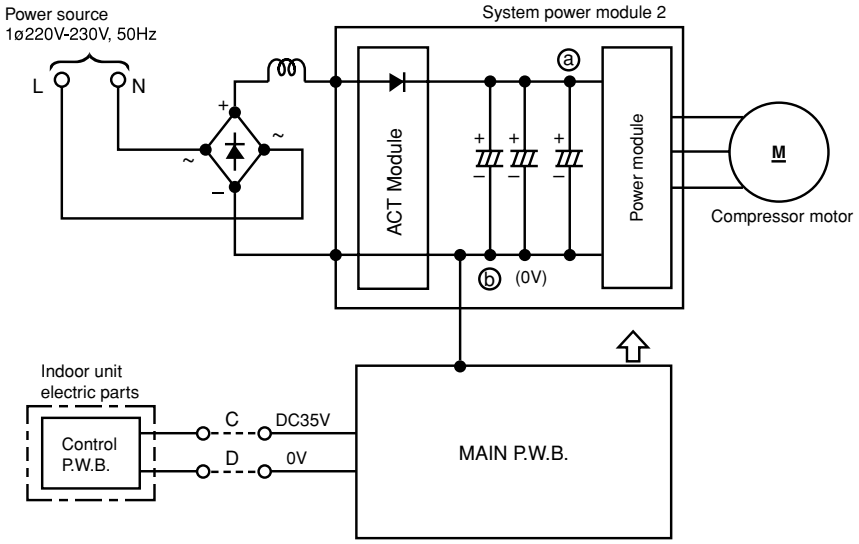

Across ⓐ – ⓑ (0V line)..... approx 260-360V
Across ⓐ – ground..... approx 155-170V
Across ⓑ (0V line)– ground..... approx 155-170V

DANGER

When using an oscilloscope, never ground it. Don't forget that high voltages as noted above may apply to the oscilloscope.

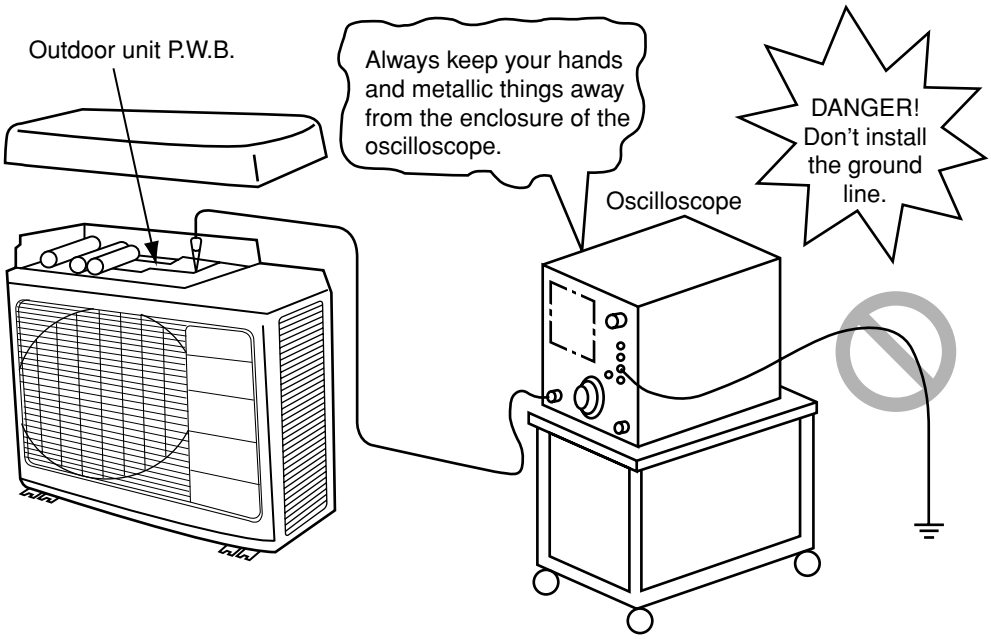

Все каталоги и инструкции здесь: https://splitsystema48.ru/instrukcii-po-ekspluatacii-kondicionerov.html

DISCHARGE PROCEDURE AND POWER SHUT OFF METHOD FOR POWER CIRCUIT

WARNING

Caution
- Voltage of about 300-330V is charged between both ends of smoothing capacitors
- During continuity check for each part of circuit in indoor unit electrical parts, disconnect red/gray lead wire connected from diode stack to system power module (SPM2) to prevent secondary trouble. (Be sure to discharge smoothing capacitor)

1. Turn OFF the Power supply to the outdoor unit.
2. After power is turned off, wait for 10 minutes or more. Then, remove electrical parts cover and apply soldering iron of 30 to 75W for 15 seconds or more to P2 and N1 terminals on system power module, in order to discharge voltage in smoothing capacitor.
3. Remove receptable of red/gray lead wire connected to system power module from diode stack before performing operation chech of each circuit.

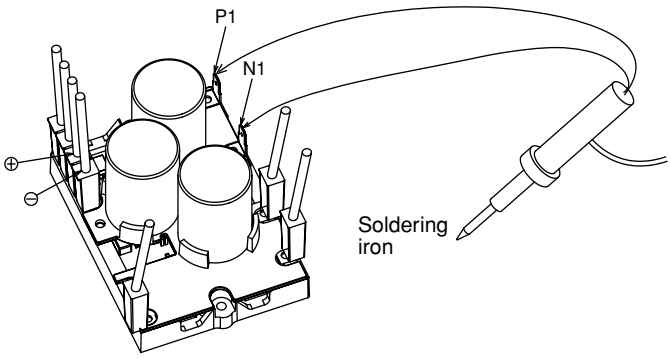

System power module

Do not use a soldering iron with transformer: If one is used, thermal fuse inside transformer will be blown

As shown above, apply soldering iron to metal parts (receptable) inside the sleeve corresponding to P1 and N1 terminals of system power module: Do this with smoothing capacitors kept connected. By removing red/gray lead wire from diode stack, power supply can be shut off. (corresponding to ⊕ and ⊖ terminals of system power module)

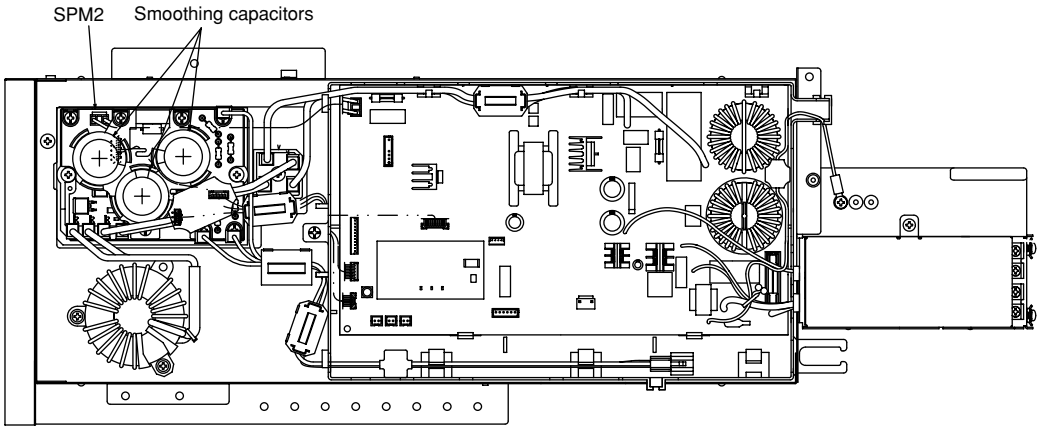

Все каталоги и инструкции здесь: https://splitsystema48.ru/instrukcii-po-ekspluatacii-kondicionerov.html

CHECKING THE INDOOR/OUTDOOR UNIT ELECTRICAL PARTS AND REFRIGERATING CYCLE

Timer lamp

Does the timer lamp on the indoor unit blink?

→ See “Troubleshooting when the timer lamp blinks”.

↓ No

Set to room temperature 16°C in the cooling mode or to 32°C in the heating mode, and press the start/stop button

↓

Does the operation lamp on the indoor unit start to light or blink?

→ No

Remove the terminal cover and check the voltage between terminal (C) and terminal (D)

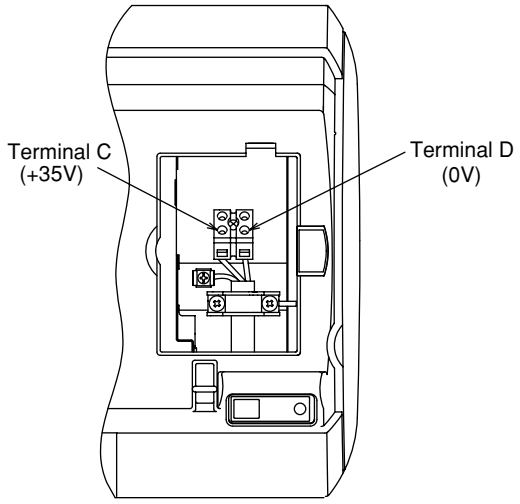

Is approx. DC 33 to 37V being generated? Is the polarity correct?

No → Check to see whether the F-cable is connected incorrectly or disconnected

Yes

Normal

↓ Yes

Is the compressor in the outdoor unit operating?

Yes → Check the refrigerating cycle.

↓ No

Remove the outdoor unit cover and electrical parts cover, and check self-diagnosis lamp LD301

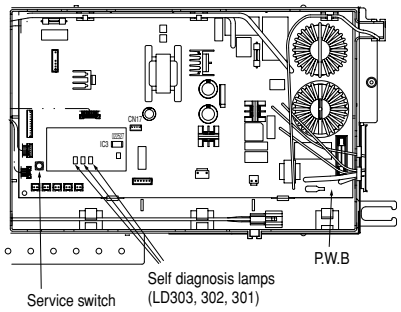

Does LD301 blink one time ?
* Repeats 0.25-second on and 2-second off.

Blinking other than one time → See “Out door unit self-diagnosis lamp lighting mode”.

One-time blinking → Press the service switch for 1 sec. Does the compressor operate? (After checking, be sure to press the service switch to stop the operation).

Yes → Check the indoor electrical parts.

No → Check the outdoor electrical parts.

Все каталоги и инструкции здесь: https://splitsystema48.ru/instrukcii-po-ekspluatacii-kondicionerov.html

TROUBLESHOOTING WHEN TIMER LAMP BLINKS.

Perform troubleshooting according to the number of times the indoor timer lamp and outdoor LD301 blink.

SELF-DIAGNOSIS LIGHTING MODE

No.	Blinking of Timer lamp	Reason for indication	Possible cause
1	5sec. – – – – – – – – 1 time	Reversing valve defective When the indoor heat exchanger temperature is too low in the heating mode or it is too high in the cooling mode.	(1) Reversing valve defective (2) Heat exchanger thermistor disconnected (only in the heating mode) (Note) The malfunction mode is entered the 3rd time this abnormal indication appears (read every 3 minutes).
2	5sec. – – – – – – – 2 times	Outdoor unit forced operation When the outdoor unit is in forced operation or balancing operation after forced operation	Electrical parts in the outdoor unit
3	5sec. – – – – – – 3 times	Indoor/outdoor interface defective When the interface signal from the outdoor unit is interrupted.	(1) Indoor interface circuit (2) Outdoor interface circuit
4	5sec. – – 4 times	Outdoor electrical assembly defective.	Please check at the outdoor electrical led lamp blinking (LD301) and refer to self diagnosis lighting mode for outdoor unit.
5	5sec. – – 9 times	Room thermistor or heat exchanger thermistor is faulty When room thermistor or heat exchanger thermistor is opened circuit or short circuit.	(1) Room thermistor (2) Heat exchanger thermistor
6	5sec. – – 10 times	Over-current detection at the DC fan motor when over-current is detected at the DC fan motor of the indoor unit.	(1) Indoor fan locked (2) Indoor fan motor (3) Indoor control P.W.B.
※1 7	5sec. – – 13 times	IC401 or IC402 data reading error When data read from IC401 or IC402 is incorrect.	IC401 or IC402 abnormal

(▮ – – Lights for 0.5 sec. at interval of 0.5 sec..)

<Cautions>

(1) If the interface circuit is faulty when power is supplied, the self-diagnosis display will not be displayed.

(2) If the indoor unit does not operate at all, check to see if the F-cable is connected or disconnected.

(3) To check operation again when the timer lamp is blinking, you can use the remote control for operation (except for mode mark ※1).

Все каталоги и инструкции здесь: https://splitsystema48.ru/instrukcii-po-ekspluatacii-kondicionerov.html

SELF-DIAGNOSIS LIGHTING MODE

DANGER (DC360V)

- SWITCH OFF MAIN POWER SUPPLY TO THE OUTDOOR UNIT AT LEAST 10 MINUTES BEFORE START THE SERVICING WORK.
- MAKE SURE THE DC VOLTAGE LEVEL AT MEASURING POSITION (P1) AND (N1) IS LESS THAN 10V.
- DO NOT TOUCH THE SCREWS OF THE SYSTEM POWER MODULE WHEN THE UNIT IS TURNED ON. HIGH VOLTAGE STILL REMAIN EVEN AFTER THE UNIT IS TURNED OFF.
- DO NOT TOUCH ANY OTHER PARTS EXCEPT THE SERVICE SWITCH WHEN SERVICE OPERATION IS CONDUCTED.

SELF-DIAGNOSIS LIGHTING MODE ■ LIT ▨ BLINKING □ OFF

LD301	LD302	SELF-DIAGNOSIS NAME	DETAILS	MAIN CHECK POINT
		[1] DURING OPERATION		LD303 LIGHTS. ■
□	□	NORMAL OPERATION	COMPRESSOR OPERATION	NOT MALFUNCTION
■	□	OVERLOAD (1)	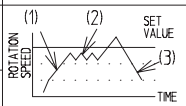 UNDER OVERLOAD CONDITION, THE ROTATION SPEED IS CONTROLLED AUTOMATICALLY IN ORDER TO PROTECT THE COMPRESSOR.	THIS SHOWS AN OVERLOAD, NOT MALFUNCTION.
□	■	OVERLOAD (2)		
■	■	OVERLOAD (3)		

LD301	LD302	[2] DURING STOP		LD303 GOES OFF. □
□	□	NORMAL STOP	INDOOR THERMOSTAT OFF. MAIN OPERATION OFF.	NOT MALFUNCTION.
▨ 1 TIME	□	RESET STOP	WHEN STOPPED WITH POWER RESET. (NORMAL WHEN POWER HAS BEEN TURNED ON).	① P.W.B.s (POWER CIRCUIT,HIC, ETC.)
▨ 2 TIMES	□	PEAK CURRENT CUT	OVER CURRENT IS DETECTED.	① SYSTEM POWER MODULE ② COMPRESSOR ③ P.W.B.s
▨ 3 TIMES	□	ABNORMAL LOW SPEED ROTATION	POSITION DETECTION SIGNAL IS NOT INPUT DURING OPERATION.	① SYSTEM POWER MODULE ② COMPRESSOR ③ P.W.B.s
▨ 4 TIMES	□	SWITCHING FAILURE	FAIL TO SWITCH FROM INITIAL LOW FREQUENCY SYNC. TO POSITION DETECTION SYNC. .	① SYSTEM POWER MODULE ② COMPRESSOR ③ P.W.B.s
▨ 5 TIMES	□	OVERLOAD LOWER LIMIT CUT	OVERLOAD CONDITION STILL PERSISTING EVEN WHEN ROTATION SPEED IS BELOW THE LOWER RPM LIMIT.	① OUTDOOR UNIT IS EXPOSED TO DIRECT SUNLIGHT OR ITS AIRFLOW BLOCKED. ② FAN MOTOR ③ FAN MOTOR CIRCUIT ④ THE VOLTAGE IS EXTREMELY LOW.
▨ 6 TIMES	□	OH THERMISTOR TEMP. RISE	OH THERMISTOR IS OPERATING.	① LEAK OF REFRIGERANT ② COMPRESSOR ③ OH THERMISTOR CIRCUIT ④ FAN MOTOR ⑤ FAN MOTOR CIRCUIT
▨ 7 TIMES	□	ABNORMAL THERMISTOR	THERMISTOR IS OPENED OR SHORTED.	① THERMISTOR ② CONNECTION OF THERMISTOR IS FAULTY ③ THERMISTOR CIRCUIT
▨ 8 TIMES	□	ACCELERATION DEFECTIVE	NO ACCELERATION ABOVE THE LOWER LIMIT OF THE ROTATION SPEED.	① LEAK OF REFRIGERANT ② COMPRESSOR
▨ 9 TIMES	□	COMMUNICATION ERROR	COMMUNICATION BETWEEN INDOOR UNIT AND OUTDOOR UNIT ARE INTERRUPTED.	① C, D CABLE IS REVERSED ② CABLE IS DISCONNECTED ③ INTERFACE CIRCUIT OF INDOOR AND OR OUTDOOR UNIT
▨ 10 TIMES	□	POWER SUPPLY VOLTAGE ERROR	POWER SUPPLY VOLTAGE IS INCORRECT.	① POWER SUPPLY VOLTAGE ② RECEPTACLE OF WIRE AT SYSTEM POWER MODULE IS NOT PROPERLY INSERTED
▨ 12 TIMES	□	FAN LOCK ERROR	OUTDOOR FAN RPM IS NOT ROTATE AS INTENDED RPM.	① FAN MOTOR ② FAN MOTOR CIRCUIT
▨ 13 TIMES	□	EEPROM READING ERROR	MICROCOMPUTER CANNOT READ THE DATA IN EEPROM.	① HIC
▨ 14 TIMES	□	ACTIVE CONVERTER DEFECTIVE	OVER VOLTAGE IS DETECTED BY SYSTEM POWER MODULE.	① SYSTEM POWER MODULE

※ EXAMPLE OF BLINKING (5 TIMES) ▨ ▨ ▨ ▨ ▨ 2SEC ▨ (▨ •• LIGHTS FOR 0.25 SEC. AT INTERVAL OF 0.25 SEC.)

WIRING DIAGRAM

BLK : BLACK GRY : GRAY
BLU : BLUE RED : RED
BRN : BROWN WHT : WHITE
GRN : GREEN YEL : YELLOW

SERVICE OPERATION COLLECT REFRIGERANT FROM INDOOR UNIT AND STORE AT OUTDOOR UNIT.

1. SWITCH OFF THE MAIN POWER SUPPLY AND THEN SWITCH IT ON AGAIN. WAIT FOR 1 MINUTE.
2. PRESS AND HOLD THE SERVICE SWITCH FOR 1 SECOND TO START OUTDOOR UNIT IN COOLING OPERATION. IN ORDER TO PREVENT PARTS FROM DAMAGE, DO NOT OPERATE THE OUTDOOR UNIT FOR MORE THAN 5 MINUTES.
3. PRESS AND HOLD THE SERVICE SWITCH FOR 1 SECOND TO STOP THE SERVICE OPERATION.
4. REPEAT STEP 1 TO 3 IF SERVICE OPERATION NEED TO BE REPEATED.

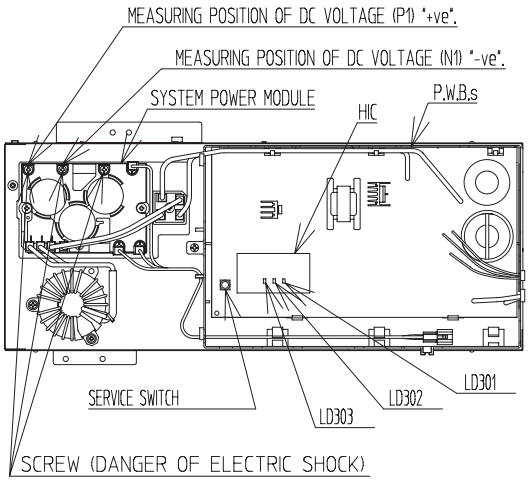

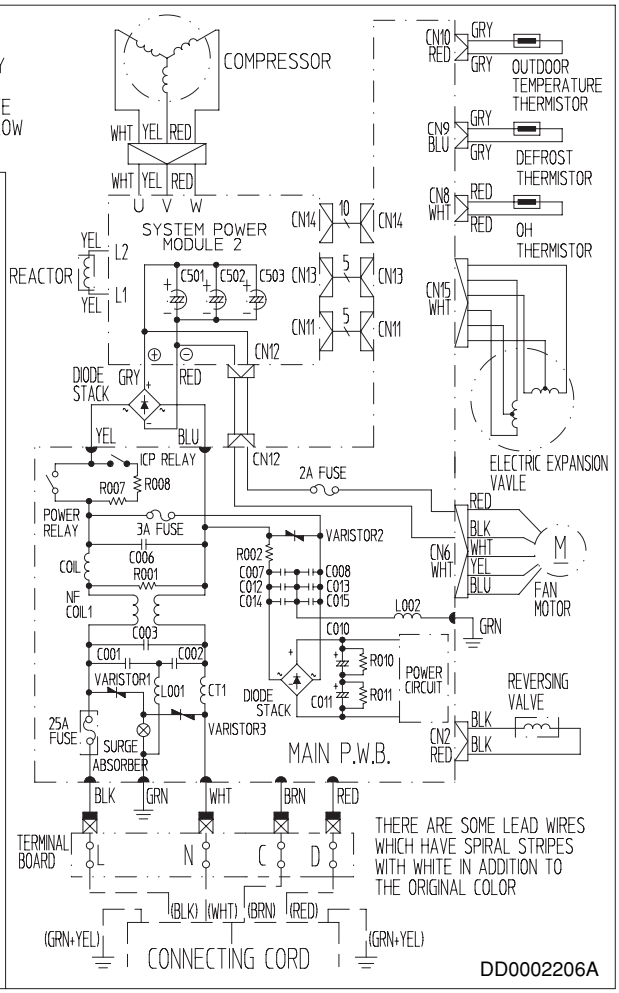

DD0002206A

Все каталоги и инструкции здесь: https://splitsystema48.ru/instrukcii-po-ekspluatacii-kondicionerov.html

CHECKING INDOOR UNIT ELECTRICAL PARTS

1. Power does not come on (no operation)

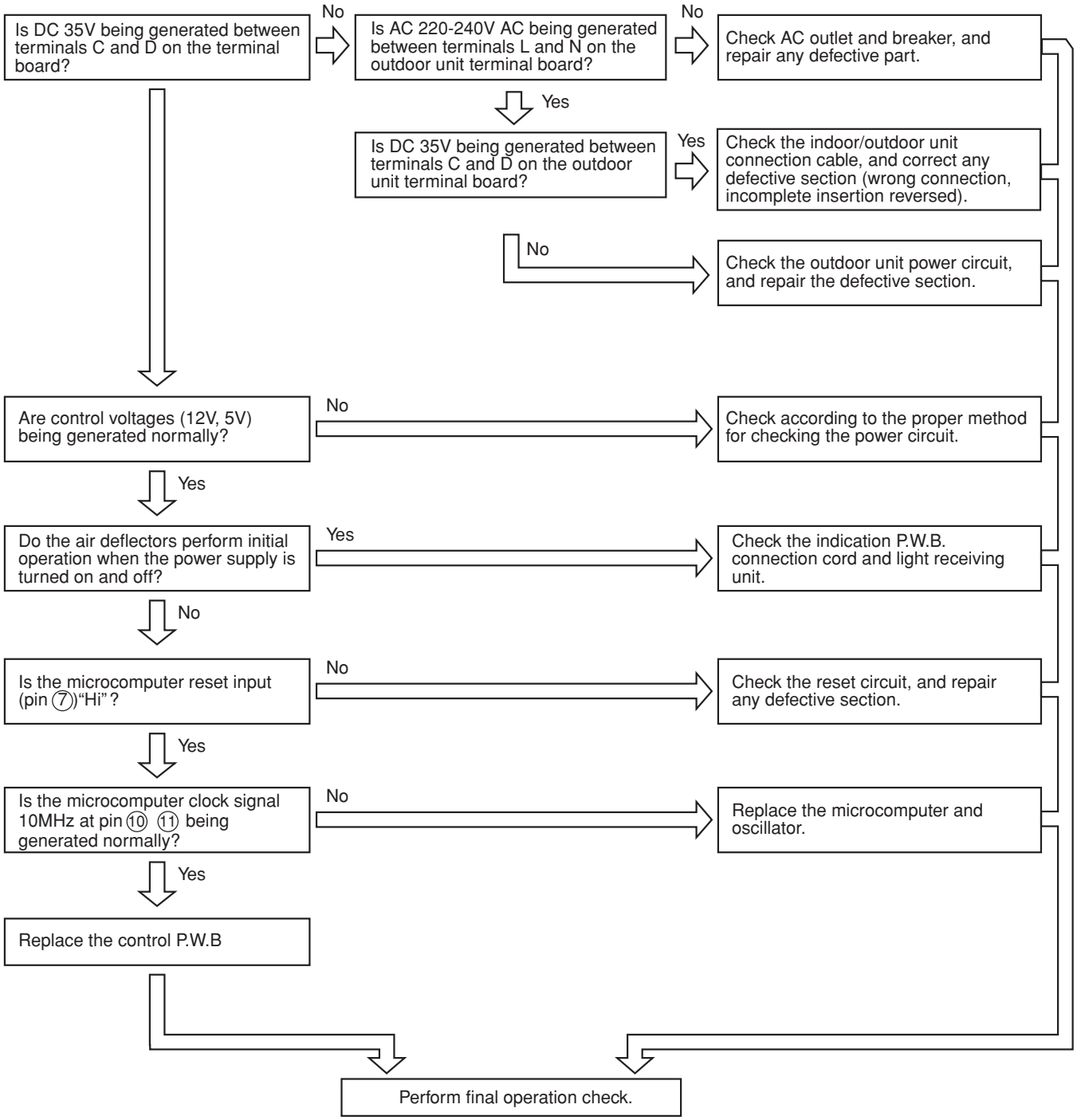

Все каталоги и инструкции здесь: https://splitsystema48.ru/instrukcii-po-ekspluatacii-kondicionerov.html

2. Outdoor unit does not operate (but receives remote infrared signal)

Set to room temperature 16°C in the cooling mode or to 32°C in the heating mode, and press the start/stop button.

Remove the outdoor unit cover and electrical parts cover, and check self-diagnosis lamp LD301.

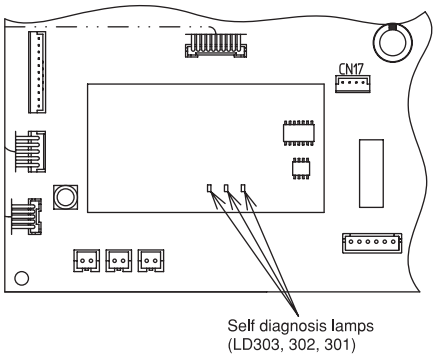

Does LD301 blink one time?
*Repeats 0.25-second on and 2-second off.

Yes →

Check the room temperature thermistor; if it is defective, replace it.
<Normal values>
10°C → approx. 20kΩ
25°C → approx. 10kΩ
30°C → approx. 8kΩ

Check the heat exchanger thermistor; if it is defective, replace it.
<Normal values>
10°C → approx. 20kΩ
25°C → approx. 10kΩ
30°C → approx. 8kΩ

No ↓

Does outdoor electrical part LD301 blink nine times?

Yes →

Is the indoor/outdoor unit communication signal superimposed on 35V DC of connection wires C and D?

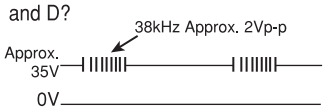

No →

Check outdoor electrical parts, and repair any defective parts (around the outdoor interface transmitting circuit).

Yes ↓

Is the indoor transmitting signal being generated at Q801's collector?

No →

Check the indoor interface transmitting circuit. Replace IC801.

Yes →

Check outdoor electrical parts, and repair any defective parts (around the outdoor interface transmitting circuit).

No ↓

Does LD303 switch off several second after it lights?

Yes →

Check outdoor electrical parts, and repair any defective parts.

Perform final operation check.

Все каталоги и инструкции здесь: https://splitsystema48.ru/instrukcii-po-ekspluatacii-kondicionerov.html

3. Only indoor fan does not operate (other is normal)

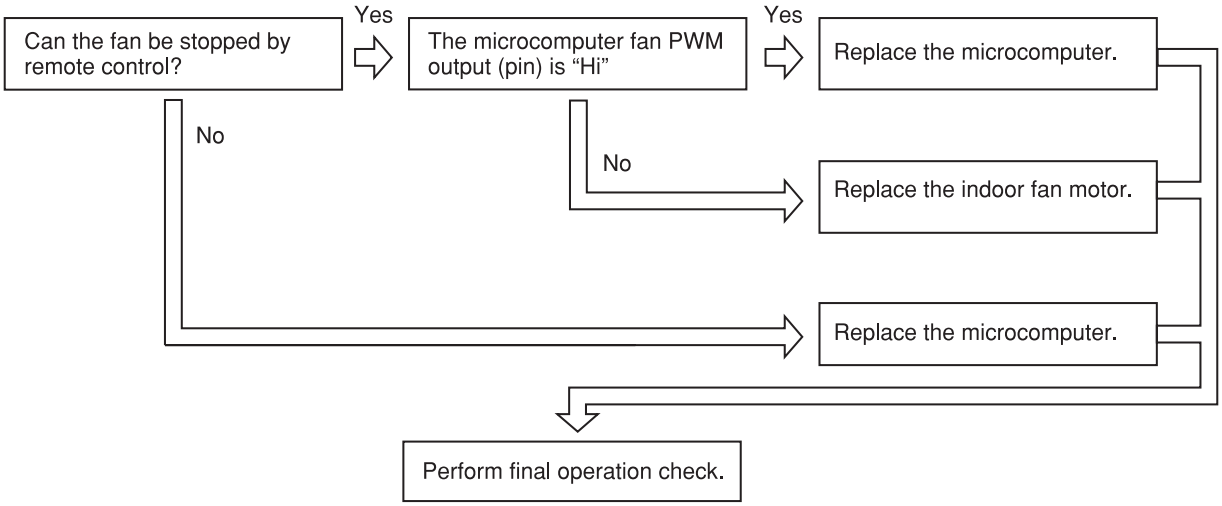

4. Air deflector does not move (others are normal)

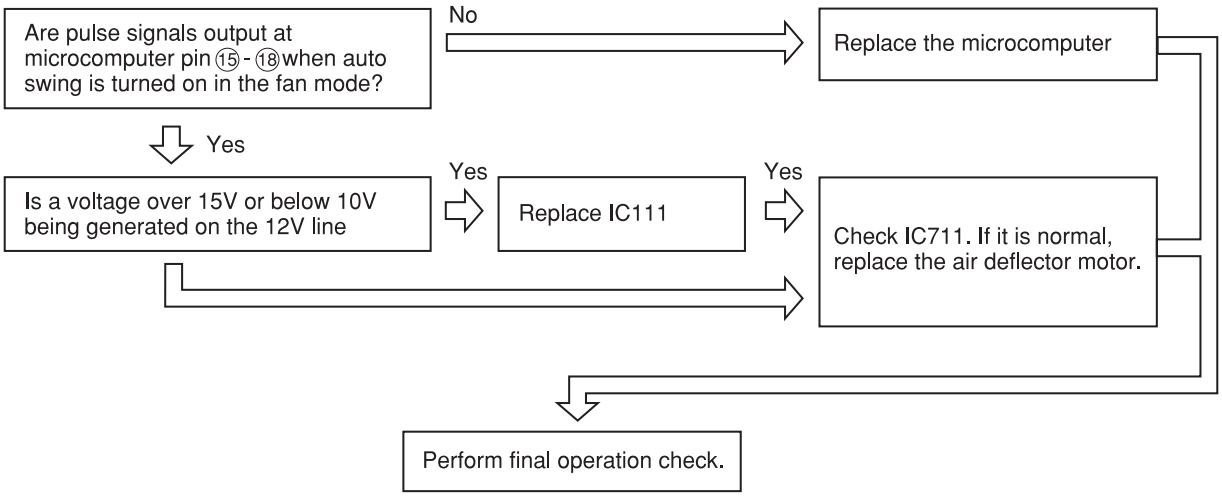

5. All systems stop from several seconds to several minutes after operation is started (all indicators are also off)

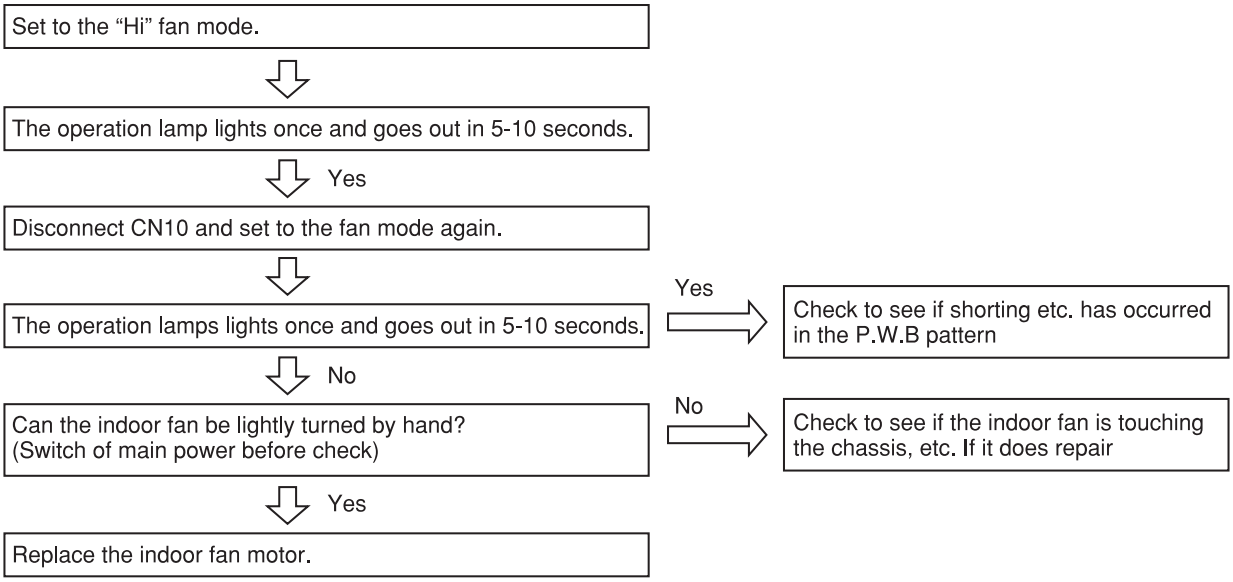

Все каталоги и инструкции здесь: https://splitsystema48.ru/instrukcii-po-ekspluatacii-kondicionerov.html

6. Check the main P.W.B (power circuit)

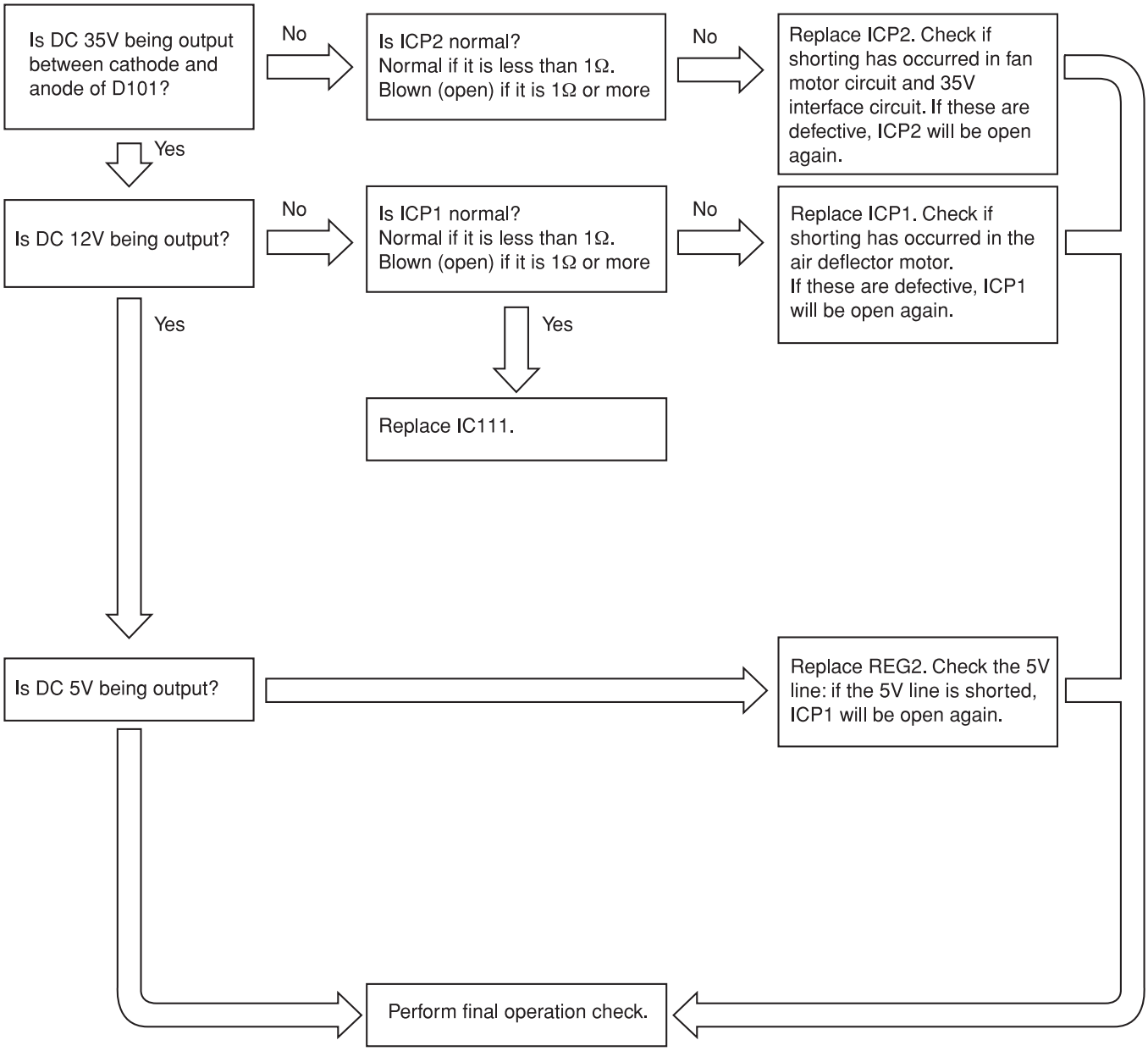

Все каталоги и инструкции здесь: https://splitsystema48.ru/instrukcii-po-ekspluatacii-kondicionerov.html

CHECKING THE REMOTE CONTROLLER

Is battery polarity correct?

No → Install the battery in the correct polarity.

Yes ↓

Is the battery check sign [+ −] flashing?

Yes → Replace the battery.

No ↓

Turn on an AM radio, bring the remote control switch within 15 cm of the radio, and press the ON/OFF button.

↓

Does the radio buzz noisily?

No → Check the LED (D1) with a multimeter.

Yes ↓

Check the indoor unit signal receiving P. W. B..
If it is good, check the main P. W. B..

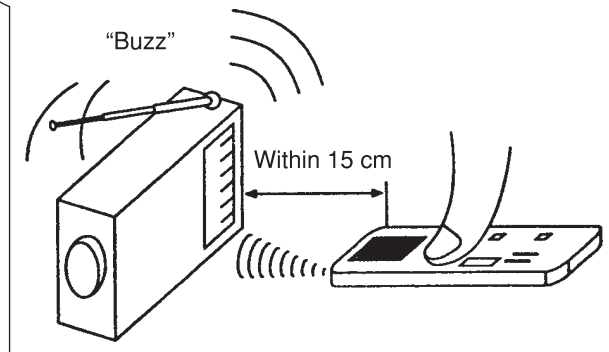

Check functions again.
If it does not work, replace the remote controller.

You can check the remote control switch by other methods as explained below.

Using the test card

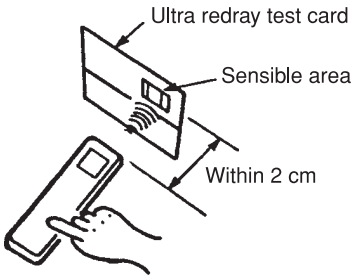

The sensible area should flash in orange when you operate the remote control unit if it is good.

Все каталоги и инструкции здесь: https://splitsystema48.ru/instrukcii-po-ekspluatacii-kondicionerov.html

CHECKING THE OUTDOOR UNIT ELECTRICAL PARTS

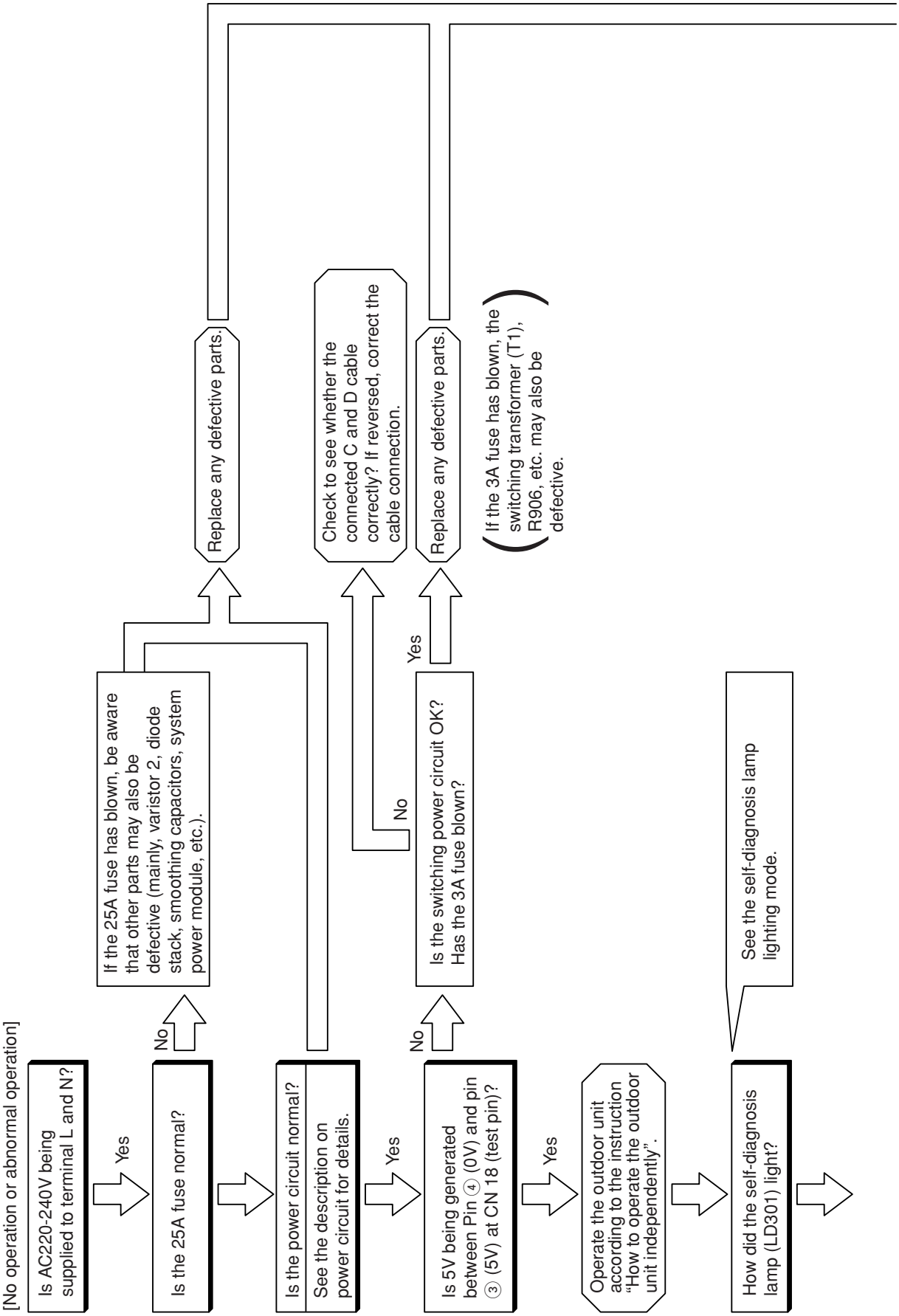

Все каталоги и инструкции здесь: https://splitsystema48.ru/instrukcii-po-ekspluatacii-kondicionerov.html

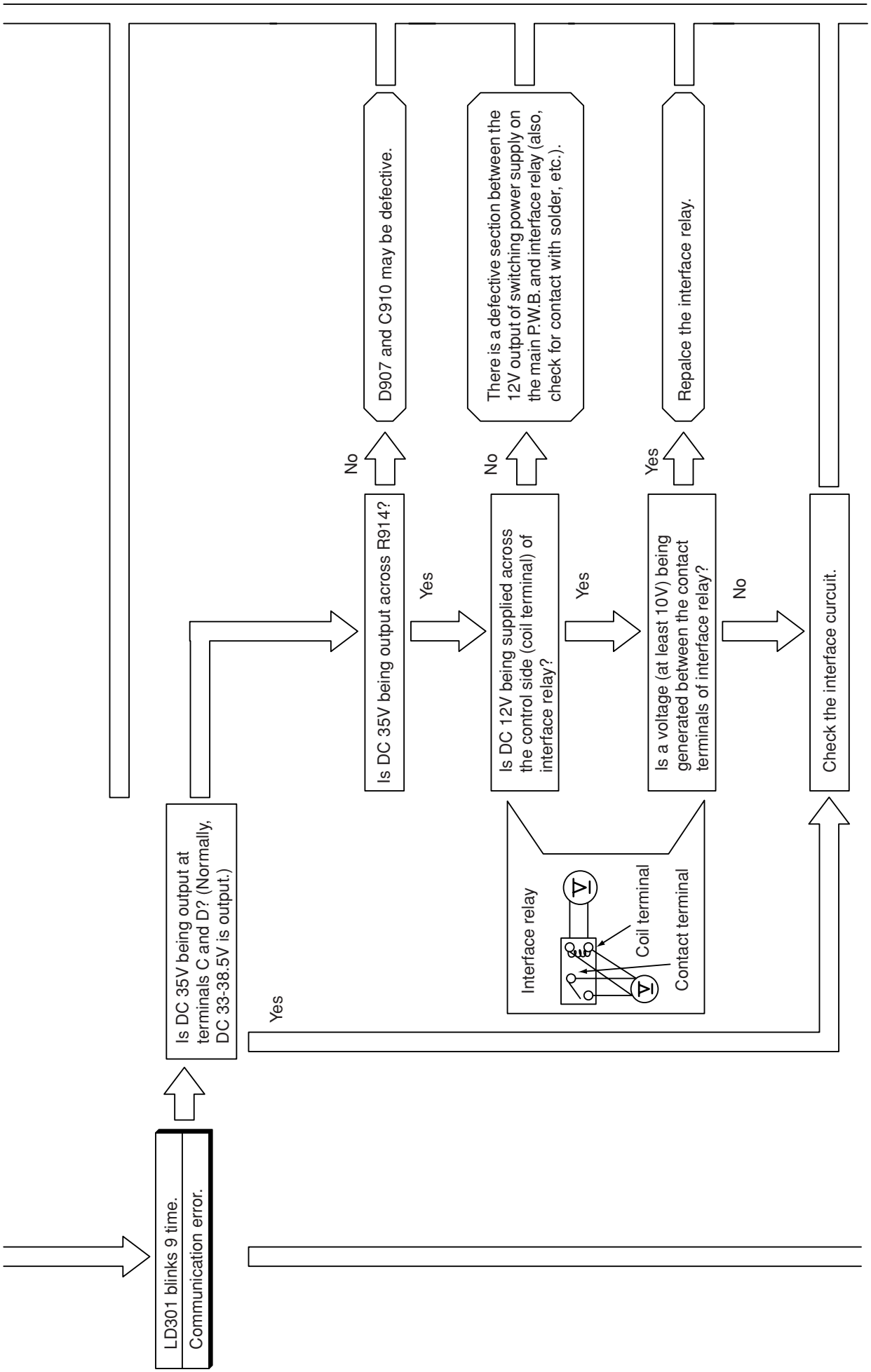

Все каталоги и инструкции здесь: https://splitsystema48.ru/instrukcii-po-ekspluatacii-kondicionerov.html

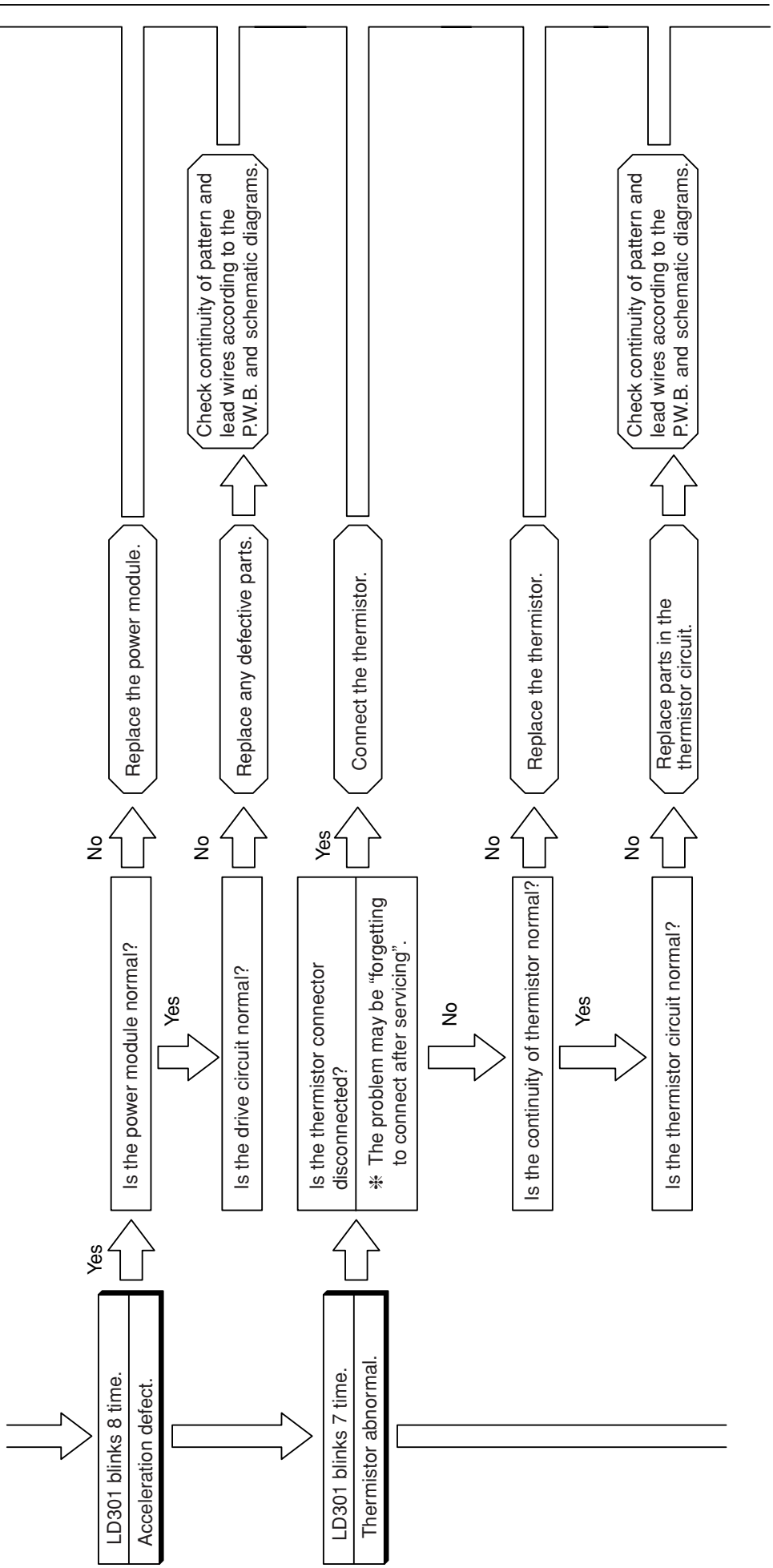

Все каталоги и инструкции здесь: https://splitsystema48.ru/instrukcii-po-ekspluatacii-kondicionerov.html

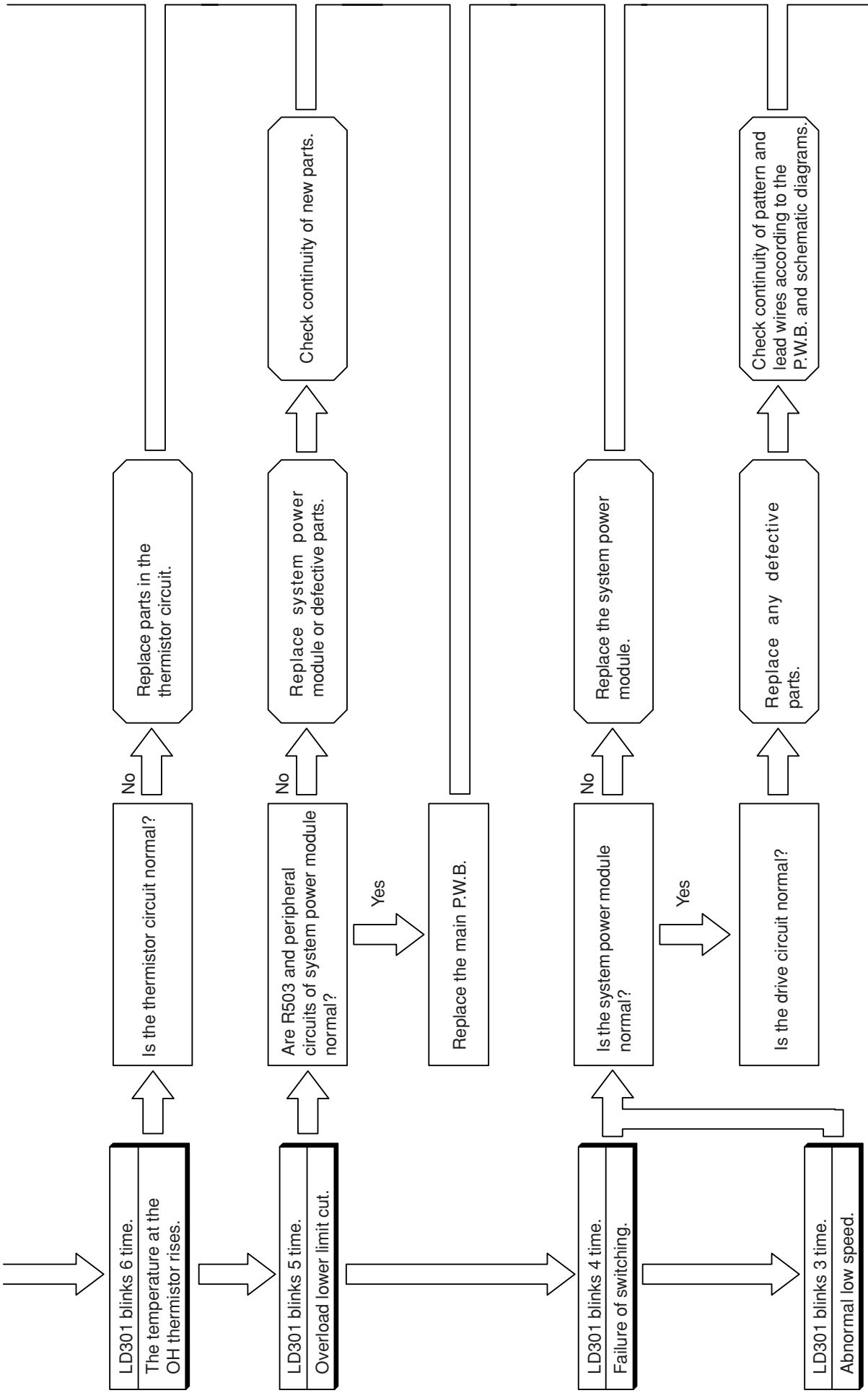

Все каталоги и инструкции здесь: https://splitsystema48.ru/instrukcii-po-ekspluatacii-kondicionerov.html

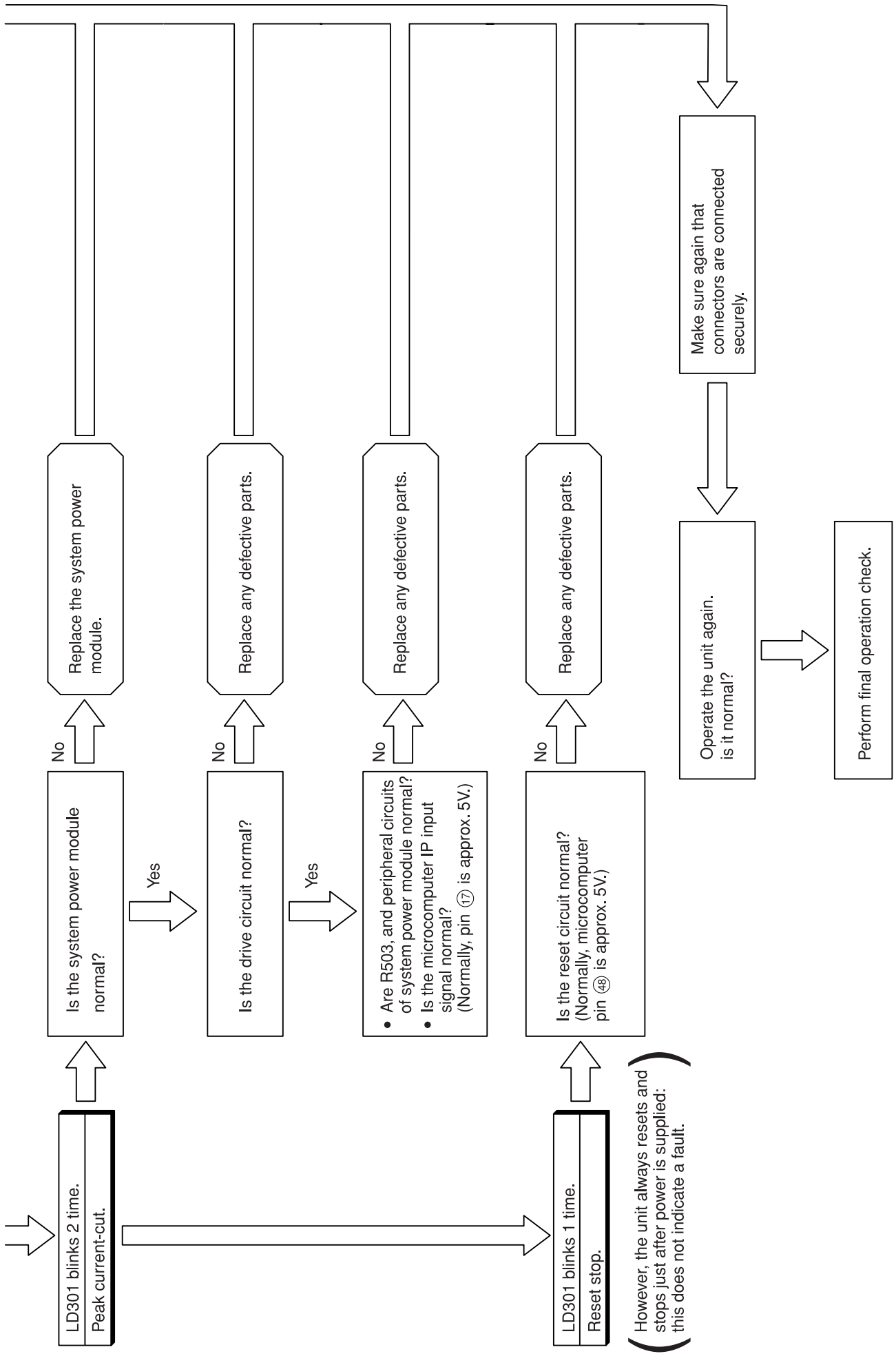

Все каталоги и инструкции здесь: https://splitsystema48.ru/instrukcii-po-ekspluatacii-kondicionerov.html

POWER CIRCUIT

Phenomenon 1 <Rotation speed does not increase>

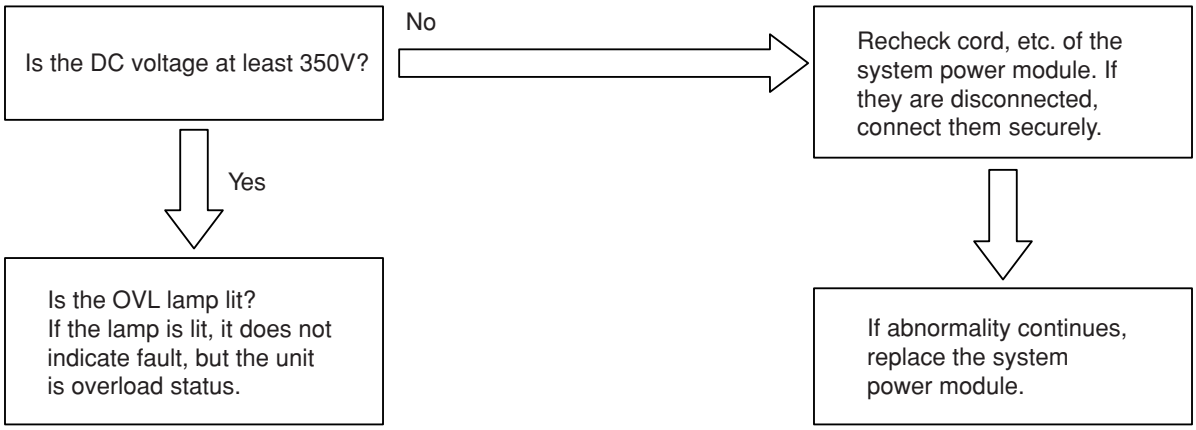

Overvoltage defect: system power module faulty (15-times blinking)

Все каталоги и инструкции здесь: https://splitsystema48.ru/instrukcii-po-ekspluatacii-kondicionerov.html

CHECKING THE REFRIGERATING CYCLE

(JUDGING BETWEEN GAS LEAKAGE AND COMPRESSOR DEFECTIVE)

1. Troubleshooting procedure (No operation, No heating, No cooling)

Connect U,V,W phase leads to the power module again and operate the air conditioner.

Is the self-diagnosis lamp mode as shown on the right?

Lighting mode / Self-diagnosis lamp	Blinks 2 times	Blinks 3 times	Blinks 4 times	Blinks 5 times	Blinks 6 times	Blinks 8times
LD301	Blinking	Blinks	Blinks	Blinks	Blinks	Blinks
Time until the lamp lights	Approx. 10 seconds			Approx. 10 seconds	Within Approx. 30 seconds	Approx. 10 seconds
Possible malfunctioning part	Compressor				Gas leakage	Compressor

Blinking off

YES

Stop to operate and check the gas pressure in balancing mode.

Normal
(0.39-0.98 MPaG)
(4-10 kg/cm²G)

● Checking the system power module

Gas leaking
(less than 4kg/cm²G)
(less than 0.39 MPaG)

When the self-diagnosis lamp lights in the same condition as above.

Gas leaks.
Repair and seal refrigerant.

The compressor is defective. Replace it and seal refrigerant.
(If the compressor checker for an inverter type air conditioner is available, re-check using it.)

Perform a final check of operation.

Все каталоги и инструкции здесь: https://splitsystema48.ru/instrukcii-po-ekspluatacii-kondicionerov.html

HOW TO CHECK SYSTEM POWER MODULE

Checking system power module using tester
Set tester to resistance range (X 100)
If indicator does not swing in the following conductivity check, the system power module is normal.
(In case of digital tester, since built-in battery is set in reverse direction, ⊕ and ⊖ terminals are reversed.)

⚠ CAUTION

If inner circuit of system power module is disconnected (open), the indicator of tester will not swing and this may assumed as normal. In this case, if indicator swings when ⊕ and ⊖ terminals are connected in reverse of diagram below, it is normal. Furthermore, compare how indicator swings at U, V and W phases. If indicator swings the same way at each point, it is normal.

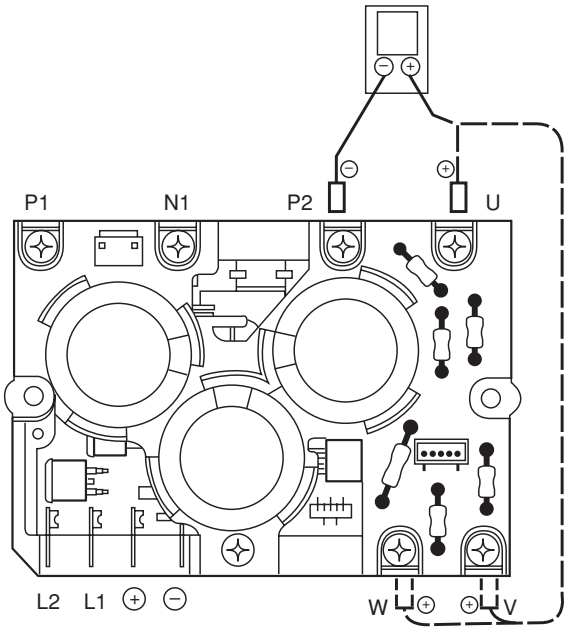

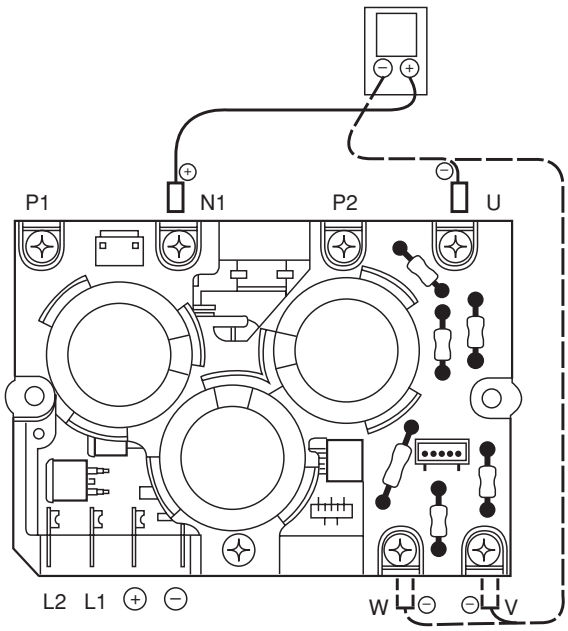

Все каталоги и инструкции здесь: https://splitsystema48.ru/instrukcii-po-ekspluatacii-kondicionerov.html

HOW TO OPERATE USING THE SERVICE SWITCH THE OUTDOOR UNIT

1. Turn off the power supply to outdoor unit and then turn on again.
2. Remove the electrical box cover.

LD303 (red) will light and the unit will operate in the forced cooling mode at this time.

Never operate the unit for more than 5 minutes.

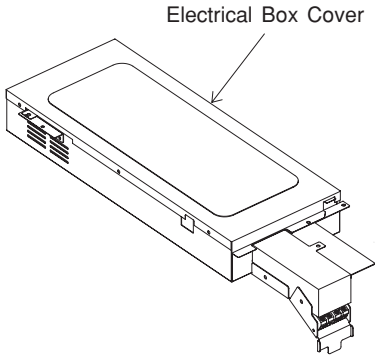

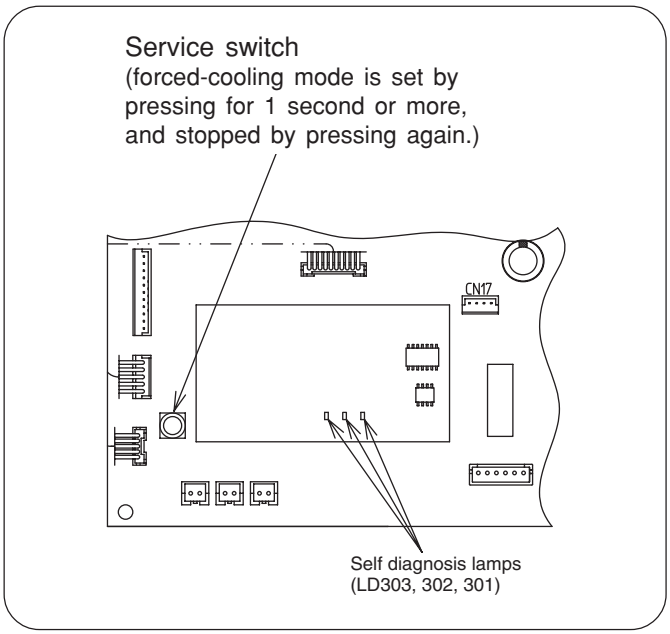

(Cautions)

(1) If interface signal (DC 35V) terminals C and D are not connected when the outdoor unit is in forced cool mode, the outdoor unit defect indicator (LD301) will blink 9 times during operation to indicate communication error.

(2) If checking is done with the compressor connector disconnected, the unit will continue normal operation when the electrical parts are normal, or it will repeat operating for approx. one minute and stop due to overload power limit cut, or it will operate in the overload status.

Be sure to push the service switch again to stop the forced cool operation.

HOW TO OPERATE THE OUTDOOR UNIT INDEPENDENTLY

1. Connect the large dia. pipe side and small dia. pipe side service valves using a pipe.

Connect the small diameter service value and the large diameter service valve using the reducing union and copper pipe as shown on the right.

Charge refrigerant of 300g after vacuuming (※ 1)

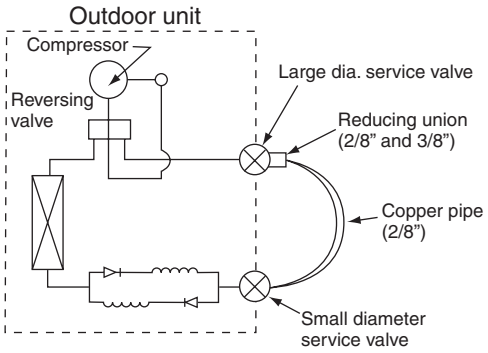

Parts to be prepared

(1) Reducing union
2/8” (6.35mm)
1/2” (12.7mm)
(2) Copper pipe (2/8” and 1/2”)

Do not operate for more than 5 minutes

The operation method is the same as “How to operate using the connector to servicing the outdoor unit”.

※ 1 The charging amount of 300g is equivalent to the load in normal operation.

Все каталоги и инструкции здесь: https://splitsystema48.ru/instrukcii-po-ekspluatacii-kondicionerov.html

SYSTEM POWER MODULE DIAGNOSIS

Circuit diagram of the device (excepting the reflux diode)	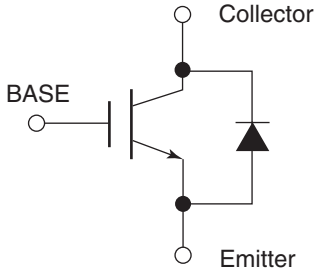
Circuit diagram of the module	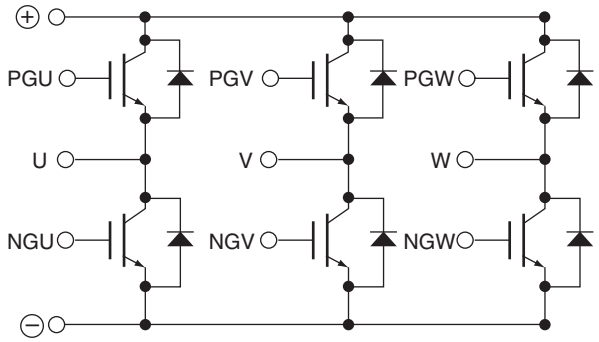
Terminals symbol mark of the module ※ See next page for measuring value using tester	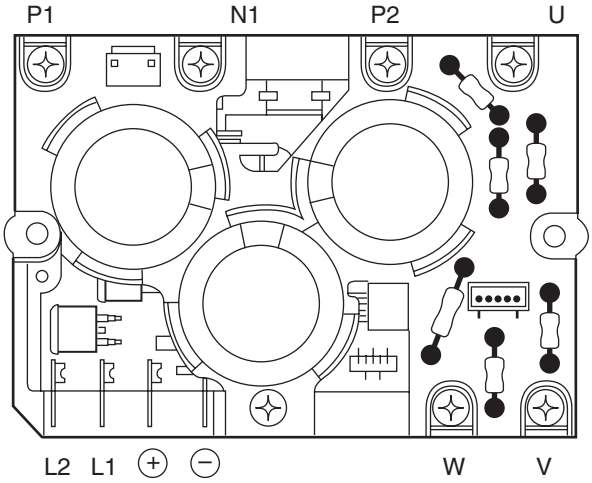

Все каталоги и инструкции здесь: https://splitsystema48.ru/instrukcii-po-ekspluatacii-kondicionerov.html

PARTS LIST AND DIAGRAM

INDOOR UNIT
MODEL : RAK-65NH5A

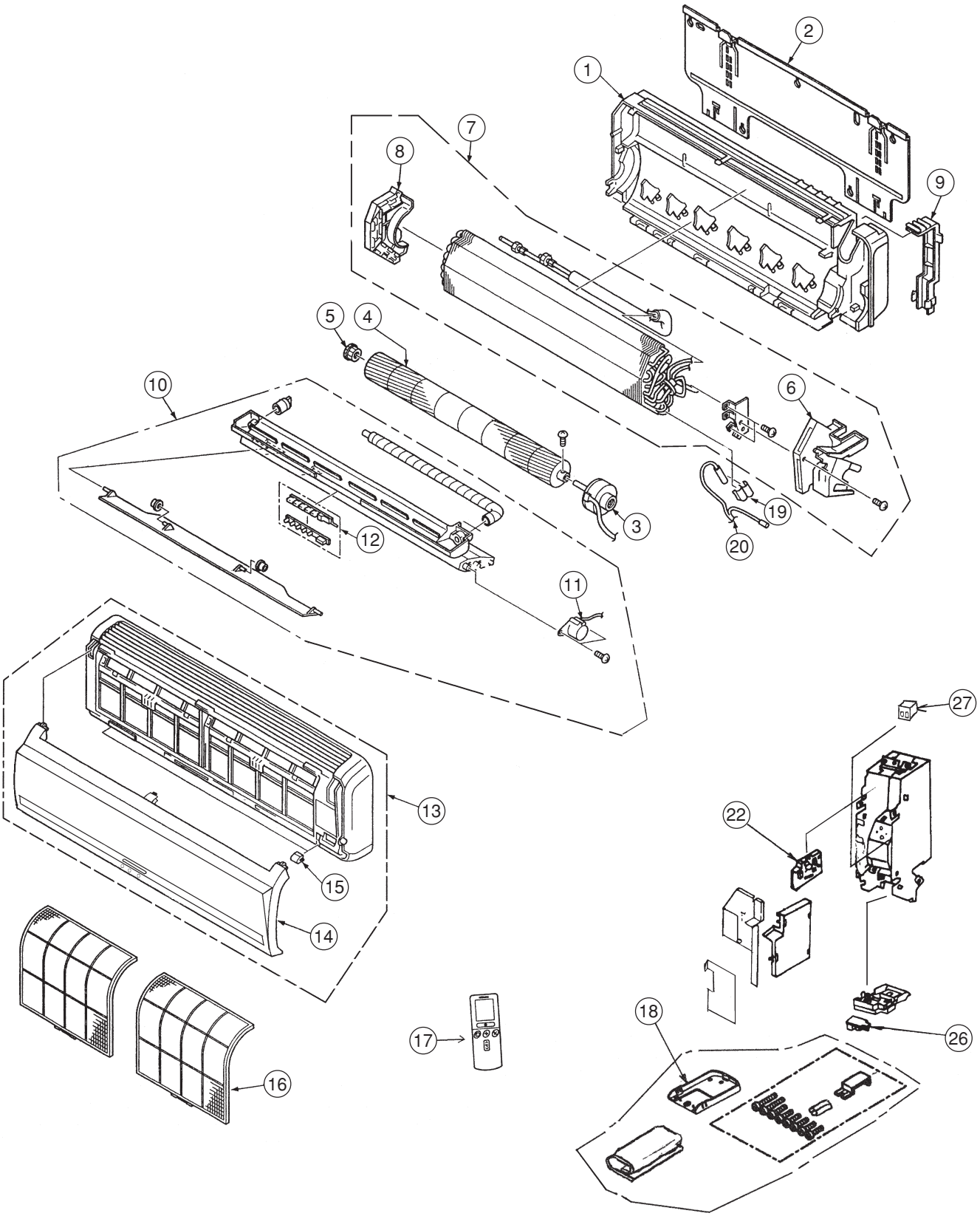

Все каталоги и инструкции здесь: https://splitsystema48.ru/instrukcii-po-ekspluatacii-kondicionerov.html

MODEL RAK-65NH5A

NO.	PART N0.	Q'TY / UNIT	PARTS NAME
1	PMRAK-60NHA 003	1	CABINET
2	PMRAS-40CNH2 R23	1	MOUNTING PLATE
3	PMRAK-60NHA R04	1	FAN MOTOR
4	PMRAS-60YHA R04	1	TANGENTIAL FAN
5	PMRAS-25CNH2 005	1	P-BEARING ASSY
6	PMRAS-51CHA1 004	1	FAN MOTOR BASE
7	PMRAK-60NHA R05	1	CYCLE ASSY
8	PMRAS-51CHA1 R20	1	FAN COVER
9	PMRAS-18CP5 003	1	PIPE SUPPORT
10	PMRAK-60NHA R06	1	DRAIN PAN ASSY
11	PMRAK-60NHA R09	1	AUTO SWEEP MOTOR
12	PMRAS-18CH1 R01	1	P.W.B (LED)
13	PMRAS-60YH5 001	1	FRONT COVER ASSEMBLY
14	PMRAS-60YH5 002	1	FRONT PANEL
15	PMRAS-10C7M 008	3	CAP
16	PMRAS-51CHA1 R10	2	AIR FILTER
17	PMRAS-51CHA1 R11	1	REMOTE CONTROL ASSEMBLY
18	PMRAS-10C3M 003	1	REMOTE CONTROL SUPPORT
19	PMRAS-40CNH2 R26	1	THERMISTOR SUPPORT
20	PMRAS-07CH2 R12	1	THERMISTOR
22	PMRAK-65NH5 R01	1	P.W.B (MAIN)
26	PMRAK-60NHA R01	1	P.W.B (RECEIVER)
27	PMRAS-10C6M R02	1	TERMINAL BOARD (2P)

Все каталоги и инструкции здесь: https://splitsystema48.ru/instrukcii-po-ekspluatacii-kondicionerov.html

PARTS LIST AND DIAGRAM

OUTDOOR UNIT
MODEL : RAC-65NH5

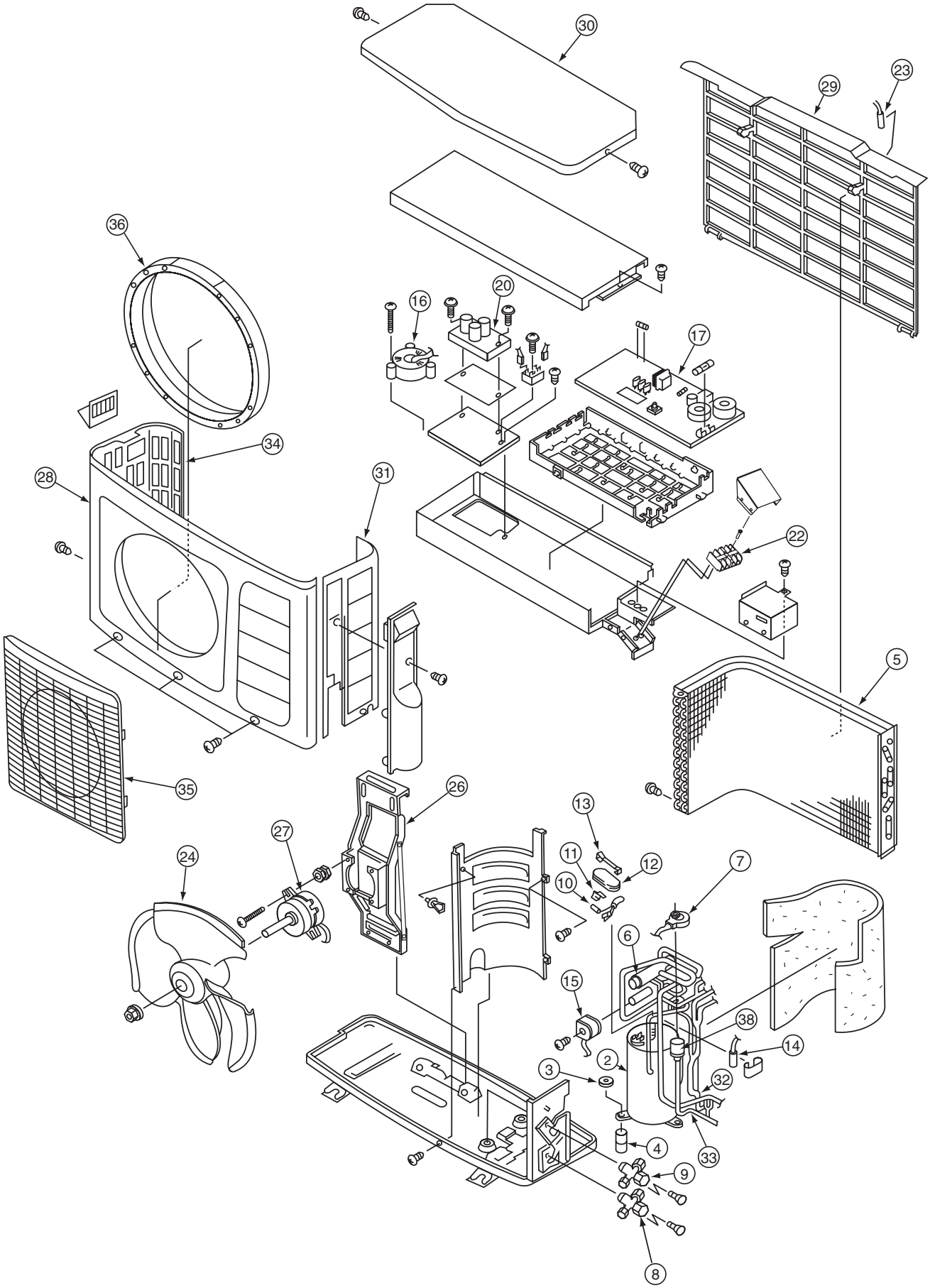

Все каталоги и инструкции здесь: https://splitsystema48.ru/instrukcii-po-ekspluatacii-kondicionerov.html

MODEL RAC-65NH5

NO.	PART N0. RAC-65NH5		Q'TY / UNIT	PARTS NAME
2	PMRAC-65NH5	901	1	COMPRESSOR
3	KPNT1	001	4	PUSH NUT
4	RAC-2226HV	805	3	COMPRESSOR RUBBER
5	PMRAC-50NH4	S02	1	CONDENSER
6	PMRAC-25NH4	S02	1	REVERSING VALVE
7	PMRAC-25NH4	S03	1	ELECTRICAL EXPANSION COIL
8	PMRAC-50NH4	S03	1	VALVE (2S)
9	PMRAC-50NH4	S04	1	VALVE (4S)
10	PMRAC-40CNH2	S14	1	THERMISTOR (OH)
11	PMRAC-25NH4	S09	1	OVERHEAT THERMISTOR SUPPORT
12	PMRAC-25NH4	910	1	OVERLOAD RELAY COVER
14	PMRAC-40CNH2	S15	1	THERMISTOR (DEFROST)
15	PMRAC-07CHV1	S21	1	COIL (REVERSING VALVE)
16	PMRAC-40CNH2	S08	1	REACTOR
17	PMRAC-60NHA	S01	1	P.W.B (MAIN)
20	PMRAC-40CNH2	S01	1	SYSTEM POWER MODULE
22	PMRAC-51CHA1	S03	2	TERMINAL BOARD (4P)
23	PMRAC-40CNH2	S16	1	THERMISTOR (OUTSIDE TEMPERATURE)
24	PMRAC-40CNH2	S17	1	PROPELLER FAN
26	PMRAC-40CNH2	S18	1	SUPPORT (FAN MOTOR)
27	PMRAC-40CNH2	S19	1	FAN MOTOR (40W)
28	PMRAC-40CNH2	S04	1	CABINET
29	PMRAC-40CNH2	921	1	NET
30	PMRAC-40CNH2	922	1	TOP COVER
31	PMRAC-50NH4	S10	1	SIDE PLATE-R
32	PMRAC-50NH4	906	1	STRAINER (PIPE)
33	PMRAC-50NH4	909	1	STRAINER (COND)
34	PMRAC-40CNH2	926	1	SIDE PLATE-L
35	PMRAC-40CNH2	928	1	GRILL
36	PMRAC-40CNH2	920	1	MOUTH RING
38	PMRAC-25NH4	S16	1	EXPANSION VALVE

Все каталоги и инструкции здесь: https://splitsystema48.ru/instrukcii-po-ekspluatacii-kondicionerov.html

HITACHI

RAK-65NH5A
RAC-65NH5

PM NO. 0418E

Printed in Malaysia

Все каталоги и инструкции здесь: https://splitsystema48.ru/instrukcii-po-ekspluatacii-kondicionerov.html